shindaiwa®

OWNER'S AND OPERATOR'S MANUAL

Diesel Engine Generator

DG150MM

Vertical, Water-Cooled 4-Cycle Diesel Engine

CAUTION
Read this manual and familiarize yourself with this contents for your safety. Do not operate or maintain this product unless you fully understand followed by the content in this manual.

DG150MM-400
X753-007 92 0
X753801-320 0

Introduction

Thank you for purchasing this Shindaiwa soundproof diesel engine generator.

- This manual has been created to ensure safe usage of this generator. Be sure to read this manual before operation. Improper operation/handling of this generator will result in an accident or malfunction.

- Handling/Operation of this generator can only be performed by persons who understand the contents of this manual and can handle/operate the generator in a safe manner. Persons who suffer from an illness, are taking medicine or not feeling way such that safe operation would be negatively affected must not operate this generator.

- Work performed using this generator and handling/operation of this generator must be in accordance with corresponding laws and regulations based on such laws. Consult with the authorized distributor where this generator was purchased if you have any inquiries regarding the corresponding laws.

- Always be sure to include this manual when loaning out this generator and instruct operating personnel to read this manual before operation.

- Store this manual in a specified location where it will be secure and available for consulting at any time. Order another copy from the authorized distributor where this generator was purchased if this manual becomes dusty, grimy or torn.

- Consult with the authorized distributor where this generator was purchased if you have any inquiries regarding any points related to this generator and manual.
  When inquiring about this generator, be sure to provide the model name and serial number.

- If disposing of this generator, do so in a manner that is in compliance with laws related to industrial waste. Contact the authorized distributor where the generator was purchased if you have any inquiries regarding proper disposal.

■ Caution notice ranks in this manual are classified as follows.

⚠ **WARNING**	A statement proceded by the triangle attention symbol and the word “WARNING” contains information that should be acted upon to prevent serious bodily injury.
⚠ **CAUTION**	A statement proceded by the triangle attention symbol and the word “CAUTION” contains information that should be acted upon to prevent mechanical damage.
<Note>	Contains other types of information and should read carefully and understand.

- Note that ⚠ **CAUTION** items can also lead to major accidents under some circumstances if not correctly followed.
  All caution notices are important. Be sure to follow all of them.

Table of Contents

1. Safety Instructions 2
2. Specifications 5
2-1. Specifications 5
2-2. Ambient Conditions 6
3. Applications 6
4. Part Names 6
4-1. External View/Part Names 6
4-2. Operation Panel Part Names 8
4-3. Output Panel Part Names 9
5. Equipment 10
5-1. Warning Indicators 10
5-2. Meters and Gauges 11
5-3. Fuel Piping Switch (3Way Fuel Valve) 15
6. Transporting/Installing 15
6-1. Transport Procedures 15
6-2. Installation Procedures 16
7. Load Connections 17
7-1. Load Cable Selection 17
7-2. Connecting Load Cables 17
7-3. Earth Leakage Relay and Grounding 19
8. Pre-Operation Inspection 20
8-1. Checking Engine Oil 21
8-2. Checking Coolant 21
8-3. Checking the Fan Belt 23
8-4. Checking the Fuel 23
8-5. Checking for Fuel, Oil and Coolant Leaks 24
8-6. Checking the Battery 24
9. Operating Procedures 25
9-1. Initial Startup/Pre-Check 25
9-2. Procedures during Operation 27
9-3. Stopping Operation 28
9-4. Protective Functions 28
9-5. Connecting with External Fuel Tank 29
10. Inspection/Maintenance 30
11. Long-Term Storage 37
12. Troubleshooting 38
13. Generator Circuit Diagram 41
14. Engine Electrical Circuit Diagram 43

1. Safety Instructions

⚠ WARNING : EXHAUST GAS POISONING

- Do not operate the generator in poorly ventilated areas such as indoors or tunnels, as the exhaust gas of the engine contains substances that are harmful to human health.
- Do not direct exhaust fumes at pedestrians or buildings.

⚠ WARNING : ELECTRIC SHOCK

- Do not operate the equipment with any doors or covers open.
- Before connecting or disconnecting load cables to/from the output terminal, always turn the output circuit breakers to the “OFF” position, stop the engine, and remove the starter key.
- Close the output terminal cover before operating.
- Do not touch the generator if the Alternator or casing becomes wet during operation.
- Do not touch output terminals or internal electric parts while the generator is operating.
- Do not change the frequency selector switch while the engine is running.
- Ground the every earth grounding terminal to the earth as set out in the manual.
- If even one of all is unconnected by mistake or accident, it will be much more dangerous for human body than the NO-RELAY case, because leaking current inevitably goes through the body.
- Even though all the earth terminals of the loads have been grounded to the earth, the bonnet grounding terminal should be grounded to the earth.
- Grounding should be made after the engine is stopped.
- Whenever the Earth leakage relay is activated, you should always repair the leaking place first of all.
- Always be sure to stop the engine and remove the starter key before performing any equipment check or maintenance.

⚠ WARNING : INJURY

- Close all doors and lock them during operation.
- Do not open the check door during operation. Keep away from moving parts such as cooling fan and fan belt..
- Always be sure to stop the engine and remove the starter key when performing inspection or maintenance.
- Use the lifting hook to lift the machines, and do not lift up the unit using tie-downs. Use of such could result in the generator falling.
- Do not lift any additional weight such as fuel tanks or trailers.
- No persons should be under a suspended generator at all time.
- Always be sure to check that the breakers on load side and switches for any equipment using the generator are at “OFF” before turning the breaker to “ON”. Also be sure to advise personnel on the load side that power will be turned on or off before operating the breaker.
- Do not modify the equipment and do not operate with parts removed.

⚠ CAUTION : EYE/SKIN INJURY

- Wear rubber gloves and other protective wear to protect eyes, skin and clothing from the battery fluid which contains diluted sulfuric acid. If the battery fluid contacts eyes or skin, wash out immediately with a sufficient amount of clean water. Be sure to receive medical treatment, especially if the fluid contacts the eyes.

⚠ CAUTION : EXPLOSION

- Never use or recharge the battery if the fluid level is below the minimum level.
- Do not create sparks or bring flame near the battery as it generates flammable gas.

⚠ CAUTION : FIRE

- Do not carry flammable items (such as fuel, gas and paint) or items that are highly combustible near the generator as the muffler, exhaust gas and other parts become extremely hot.
- Position this generator 1 m or more from walls or other hindrances, and on a level surface.
- Do not connect the generator output to indoor wiring.
- This generator uses diesel fuel. Always be sure to stop the engine and not bring flames close when inspecting fuel or refueling. Wait until the engine has cooled before performing such procedures.
- Do not use this equipment when leak is found, and repair the leaking location before operating.
- Always be sure to wipe up any spilled fuel or oil.
- Allow the generator to cool before covering with the protective cover.
- Never allow flame to come close to the generator.

⚠ CAUTION : ELECTRIC SHOCK

- Do not sprinkle water on the equipment and do not use where exposed to rain.

⚠ CAUTION : BURNS

- Do not touch the engine and surrounding components immediately after stopping the engine as they are still extremely hot.
- Do not open the radiator cap immediately after stopping the engine. Doing so will result in hot steam gushing out.
- Hot steam gushes out from the coolant sub-tank if the generator overheats. Do not touch the coolant sub-tank.
- Always be sure to stop the engine and allow the engine to cool when performing inspection or maintenance of engine oil. Opening the oil gauge or oil filler cap during operation will result in hot oil gushing out.

⚠ CAUTION : INJURY

- Always be sure to use lifting hooks when lifting up the generator, and slowly lift it straight up.
- Personnel performing lifting work must wear protective gear such as helmets, safety shoes and gloves.
- Remove the wood ties if using anchors to secure the generator.
- Position the generator on a level stable surface so that it cannot slide or move in any manner.
- Before starting operation, always be sure to turn off all switches of equipment using the generator and all breakers to “OFF”.
- Do not move the generator during operation.
- Do not operate the generator if it has been modified or any parts have been removed.
- Securely fix the equipment with rope or similar item so that it cannot move when transporting by truck or other vehicle.

⚠ CAUTION : PROPERTY DAMAGE

- Do not use the equipment for any improper applications. Improper usage can result in an accident or malfunction.
- If using this generator for medical equipment, check before use with the medical equipment manufacturer, doctor, hospital or similar entity.
- Check that the generator output setting, output terminal connection and load power source are consistent.
- Cable burnout can occur due to generated heat if the load current exceeds the allowable current of the cable.
- The voltage drop between cables is large if the cable is excessively long or thin, resulting in decreased input voltage to equipment using the generator, thereby causing decreased performance, faulty operation and malfunction.

■ Warning/Caution Label Locations

If warning or caution labels become damaged and difficult to read, replace with new labels in the indicated locations. Order labels using part number indicated in the parentheses.

①	Injury	(Part no. : X505-007550)
②	Electric shock	(Part no. : X505-007560)
③	Burn	(Part no. : X505-007830)
④	Caution: LLC spec	(Part no. : X505-007840)
⑤	Warning/Caution	(Part no. : X505-008690)
⑥	Injury	(Part no. : X505-010350)
⑦	Fire	(Part no. : X505-007650)

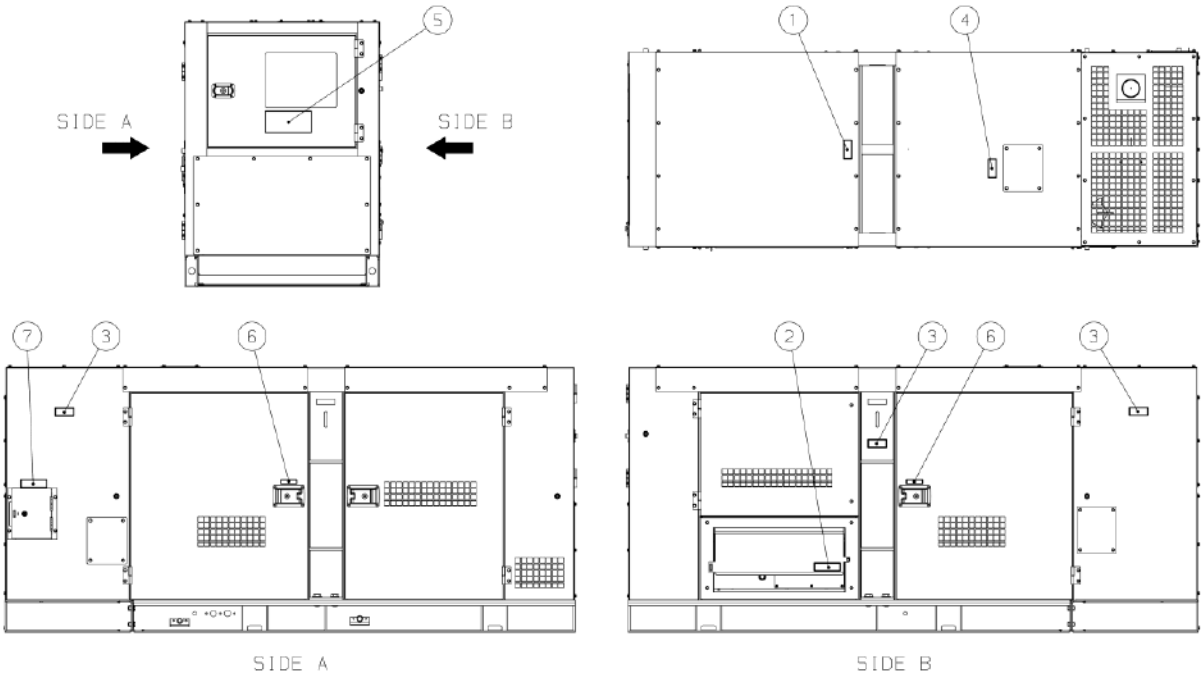

2. Specifications

2-1. Specifications

Model		Unit	DG150MM-400	
Alternator	Generating Type	-	Rotating Field, Brushless 3-Phase Synchronous Alternator	
	Rated Frequency	Hz	50	60
	Rated Output	kVA	125	150*1
		kW	100	120
	Rated Voltage	V	400 [200] *2	440 [220] *2
	Rated Current	A	180 [361] *2	197[394] *2
	Winding	-	3-phase, 4-wire	
	Power factor	%	3-phase 80	
	Insulation class	-	F	
	Excitation	-	Self-Excitation(Brushless)	
	No. of poles	-	4	
Engine	Types	-	Vertical Water-cooled 4-cycle Diesel Engine	
	Model (Manufacturer)	-	6D16-TLE2D (MITSUBISHI)	
	No. of Cylinders (bore x stroke)	mm	6 (118 X 115)	
	Continuous rated output	kW	113	135
		PS	153.6	183.5
	Rated speed	min^{-1}	1500	1800
	Displacement	L	7.54	
	Combustion system	-	Direct Fuel Injection (Turbocharged with Intercooler)	
	Cooling method	-	Radiator	
	Lubricating method	-	Forced lubrication	
	Starting method	-	Electric start	
	Fuel	-	Diesel Fuel （ASTM No. 2-D）	
	Lubricant oil	-	CD or CF-4 class	
	Fuel tank capacity	L	250	
	Lubricant volume (Full)	L	20	
	Cooling water volume	L	26	
	Starting motor capacity	V-kW	24 – 5	
	Charging dynamo capacity	V-A	24 - 35	
	Battery	-	105E41R x2	
Unit	Length	mm	3230	
	Width	mm	1100	
	Height	mm	1500	
	Dry Weight	kg	2270	
	Installed Weight	kg	2540	

*1: For the output at 130kVA or below, set the voltage selector at 380V. For 136kVA or below, set the voltage selector at 200V.

*2:The values in brackets are optional data, when modified to 200/220V by the dealers only. As default 3-phase output is set at 400/440V, contact your authorized distributor to adjust the terminal lug setting if necessary to obtain 200/220V for 3-phase output.

2-2. Ambient Conditions

Use this generator in ambient conditions as described below. Failure to provide these conditions can result in problems such as malfunction, insufficient output and reduced durability.

■ Ambient temperature:-15 to 40 degree Celsius
■ Relative humidity: 85% or less
■ Elevation: 300m or less

3. Applications

- Power source for submerged pumps and similar civil engineering equipment
- Power source for lighting and similar equipment
- Power source for electrical tools and household appliances

⚠ CAUTION : PROPERTY/SECONDARY DAMAGE
- Do not use for any application other than those listed above.
- If using this generator for medical equipment, check before use with the medical equipment manufacturer, doctor, hospital or similar entity.

4. Part Names

4-1. External View/Parts Names

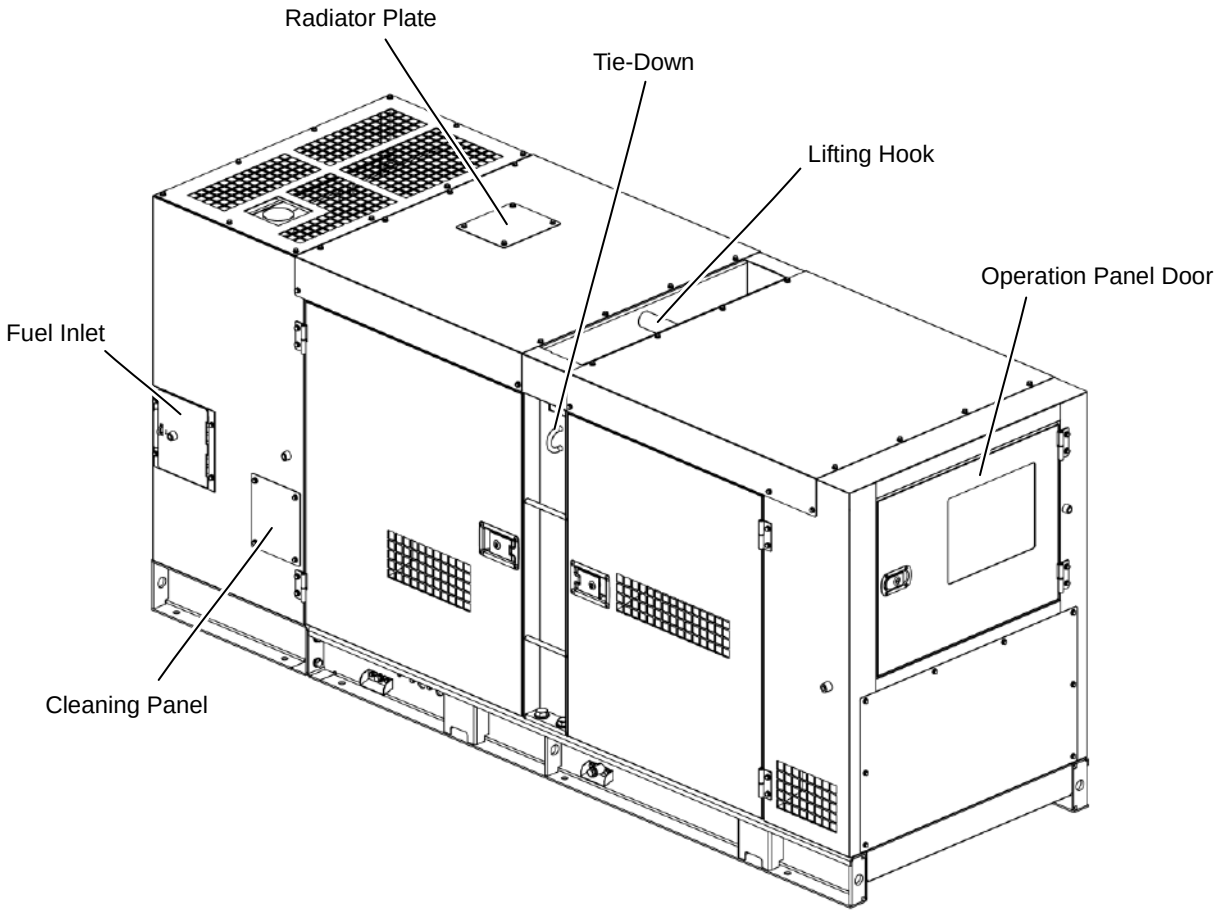

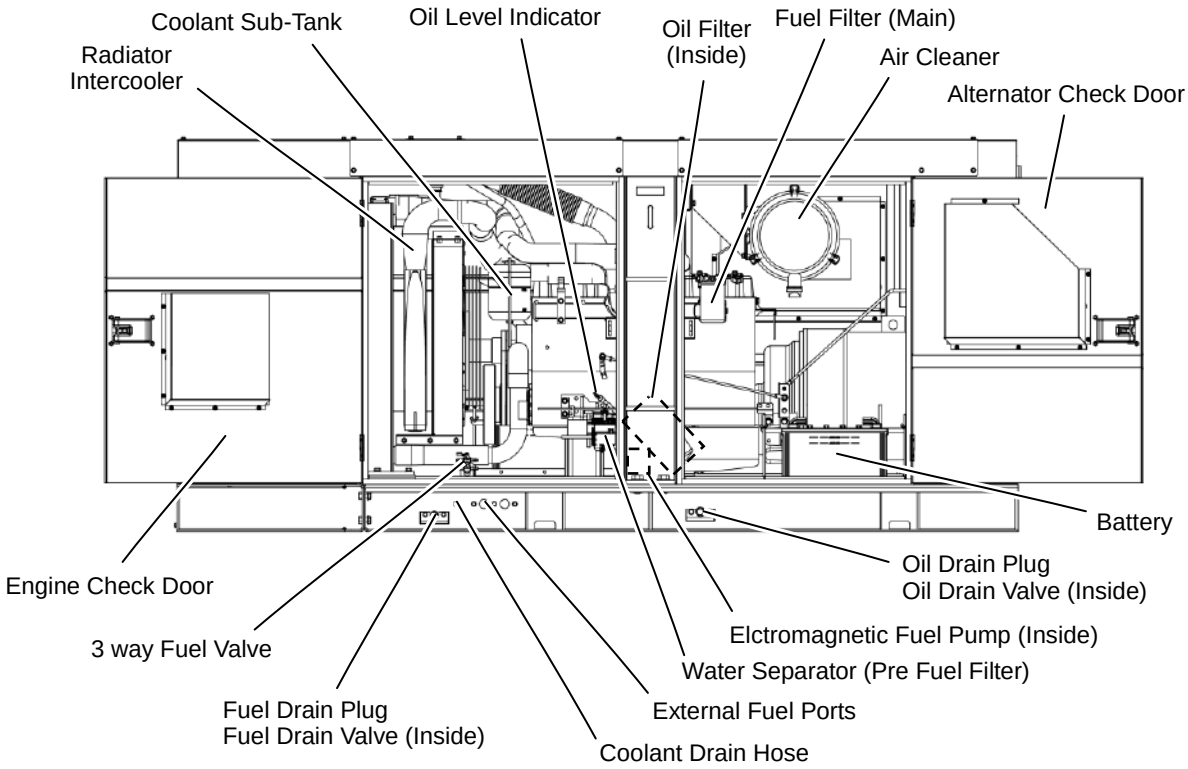

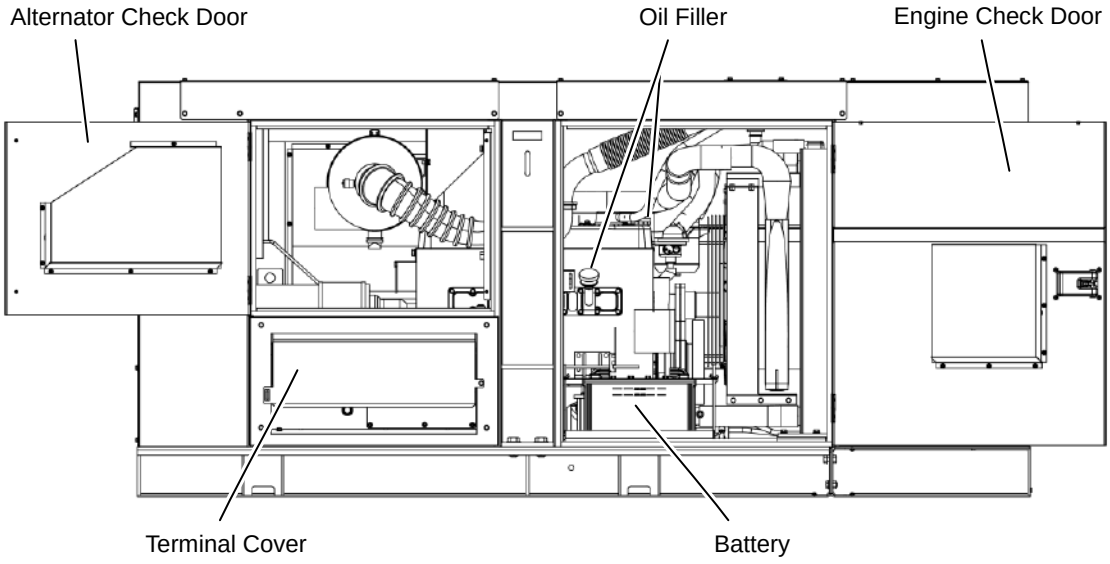

Accessories

Owner's and Operator's Manual

Engine Warranty Manual

Starter Key (2 pcs.)

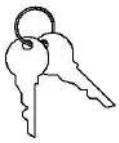

Door Key (2 pcs.)

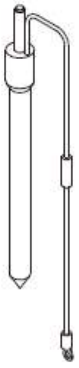

Grounding Rod

4-2. Operation Panel Part Names

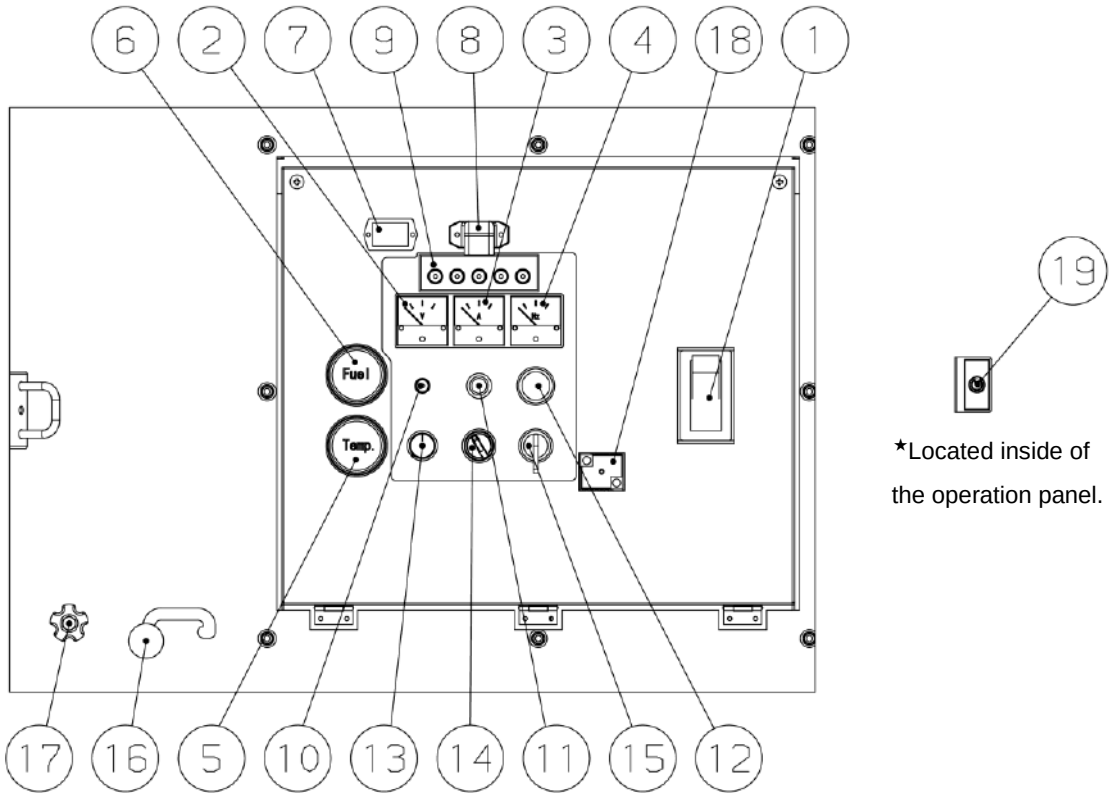

①	Circuit Breaker	⑪	Over Load Pre-caution Lamp
②	Voltmeter	⑫	Preheat Lamp
③	Ammeter	⑬	Voltage Regulator
④	Frequency Meter	⑭	Ammeter Selector Switch
⑤	Water Temperature Gauge	⑮	Starter Switch
⑥	Fuel Gauge	⑯	Throttle Lever
⑦	Hour Meter	⑰	Frequency Adjust Screw
⑧	Pilot Lamp	⑱	Earth Leakage Relay
⑨	Warning Indicators	⑲	★Frequency Selector Switch (inside)
⑩	400/440V Output Lamp		

4-3. Output Panel Part Names

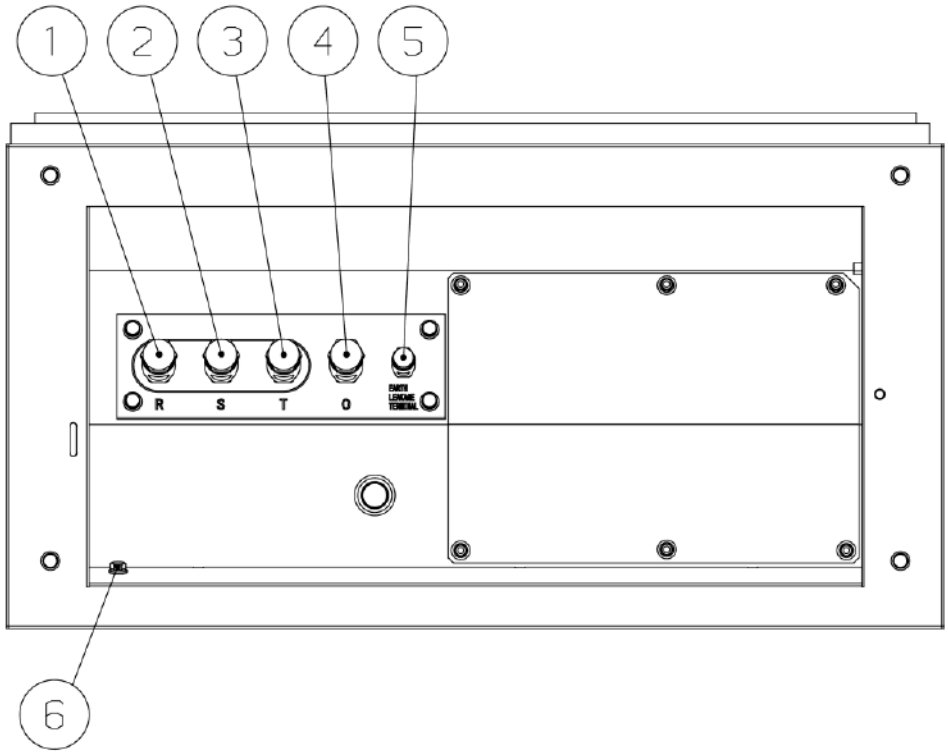

①	3-Phase Output Terminal “R”	④	3-Phase Output Terminal “O”
②	3-Phase Output Terminal “S”	⑤	Earth Leakage Terminal
③	3-Phase Output Terminal “T”	⑥	Bonnet Grounding Terminal

5. Equipment

5-1. Warning Indicators

⚠ WARNING : INJURY

- Do not open the check door during operation. Keep away from moving parts such as cooling fan and fan belt.
- Always be sure to stop the engine and remove the starter key when performing inspection or maintenance.

⚠ CAUTION : BURNS

- Do not touch the engine and surrounding components immediately after stopping the engine as they are still extremely hot.

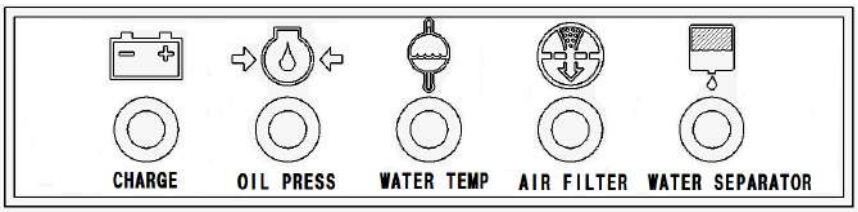

This generator is equipped with the following warning indicators: CHARGE (battery charge), OIL PRESS (engine oil pressure), WATER TEMP (coolant temperature), AIR FILTER (air cleaner clogging), and WATER SEPARATOR (water separator amount). An indicator illuminates if a malfunction/fault occurs during operation and the engine automatically stops depending on the fault type. If the equipment is normal, the CHARGE and OIL PRESS warning indicators illuminates when the starter switch is switched from STOP to RUN, and all warning indicators turn off when the engine is started.

(1) WATER TEMP (Coolant Temperature) Warning Indicator (High Water Temp.)

⚠ CAUTION: BURNS

- Do not open the radiator cap immediately after stopping the engine. Do so will result in hot steam gushing out.
- Hot steam gushes out from the coolant sub-tank if the generator overheats. Do not touch the coolant sub-tank.

If the coolant temperature rises above 100 °C during operation, the WATER TEMP and ENGINE warning indicators illuminates, and the engine automatically stops. If this occurs, hot steam will gush out of the coolant sub-tank. Check the coolant sub-tank coolant level after the generator cools and add coolant to the coolant sub-tank if it is insufficient. (Ref.“**8-2. Checking Coolant**”) If the coolant is at the specified amount, it is probable that the fan belt is loose or there is a coolant leak. Wait for the engine to cool and inspect for these problems.

< Note>

- The coolant temperature cannot be detected if the coolant level is excessively low. Always be sure to check the coolant level in the radiator coolant sub-tank before starting work.

(2) OIL PRESS (engine oil pressure) Warning Indicator (Low Oil Press.)

⚠ CAUTION: BURNS

- Always be sure to stop the engine and allow the engine to cool when performing inspection or maintenance of engine oil. Opening the oil gauge or oil filler cap during operation will result in hot oil gushing out.

If the engine oil pressure drops below 0.98 x 100 kPa during operation, the OIL PRESS and ENGINE warning indicators illuminates, and the engine automatically stops. If this occurs, check the engine oil level and add engine oil until it reaches the maximum level.

< Note >

- This oil pressure warning indicator cannot detect oil deterioration. Change the engine oil periodically. (Ref.“**8-1. Checking Engine Oil**”)

(3) BATTERY (Insufficient Charging) Warning Indicator (Low Battery Voltage)

The BATTERY warning indicator illuminates when charging is not possible during operation. If this occurs, contact the authorized distributor where the generator was purchased.

< Note >

- This battery charging warning indicator cannot detect battery deterioration or insufficient battery fluid. (Ref.“**8-6. Checking the Battery**”)

(4) AIR FILTER (Air Cleaner Clogging) Warning Indicator

The AIR FILTER warning indicator illuminates if the air cleaner element becomes clogged during operation. If it is illuminated, immediately stop the engine and clean or replace the air cleaner element. (Ref.“**10. Inspection/Maintenance (3) Air Filter Element Cleaning/Replacement**”)

(5) WATER SEPARATOR (Water Separator Amount) Warning Indicator

The WATER SEPARATOR warning indicator lights up if the liquid stored in the water separator exceeds approximately 80 ml during operation. If it lights up, immediately stop the engine and drain the liquid stored in the water separator. (Ref.“**10. Inspection/Maintenance (4) Draining Water from the Water Separator**”)

5-2. Meters and Gauges

Engine Meters and Gauges

(1) Hour Meter

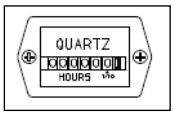

Displays the operating time. Use this to schedule periodic inspection. Be careful as the hour meter operates when the starter switch is at RUN regardless of whether the engine is running or stopped.

(2) Water Temperature Gauge

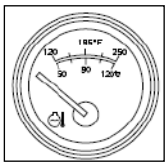

Water Temperature Gauge displays the temperature of engine coolant. Normal temperature may vary depending on the environment, but it should be between 75 to 90 °C.

< Note >

- If the temperature exceeds normal value, disconnect the load, idle the engine at 700min^{-1}, and wait until the indication falls to the normal temperature range.

(3) Fuel Gauge

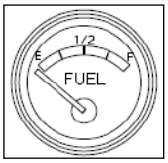

It shows the volume in the fuel tank.
When filled up, it shows 『F』.
When the needle indicator is approaching to『E』, the fuel tank is empty. Replenish fuel enough promptly.

Generator Meters and Gauges

(1) Voltmeter

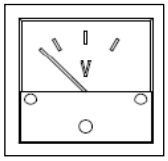

The voltmeter displays the 3-phase output voltage (voltage between R-T) from the generator.Check that 400V is displayed at 50Hz and 440V at 60Hz during operation.Check that 200V is displayed at 50Hz and 220V at 60Hz during operation if using at the 3-phase 200V setting.

(2) Ammeter

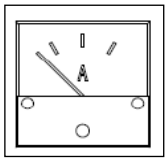

The ammeter displays the output current (Phase) from the generator.Turn the ammeter selector switch to “R” to display the output current of the 3-phase R phase. Turn the switch to “S” to display the output current of the 3-phase S phase. “T” displays the output current of 3-phase output terminal T.

(3) Frequency Meter

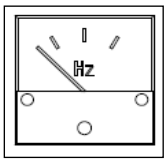

Frequency Meter will display the frequency of the generator.
Please check it showing 50Hz or 60Hz during operation.

Lamps

(1) Preheat Lamp

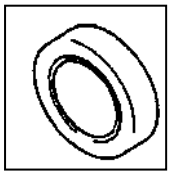

Turn the starter switch to the “PREHEAT” position.
The glow lamp converts to “red” after approx. 15 sec. after preheating completes.

< Note >

- Do not leave the starter key at “PREHEAT” over 30 sec. otherwise it may damage the preheating feature.

(2) Pilot Lamp

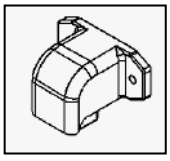

The pilot lamp turns on during power generates.

(3) Over Load Pre-caution Lamp , and Output Terminal for Lighting of Additional Lamp (Aux Lamp Terminal)

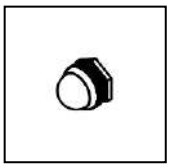

This lamp starts to flash if the output exceeds around 80% of the rated output. Use this generator in a range that does not exceed the rated output while the lamp is flashing. The lamp turns off when the output drops below 80% of the rated output.
This generator is equipped with an Aux Lamp Terminal. DC 24 V is output to the Aux Lamp Terminal at the same time as when the Over Load Pre-caution Lamp is flashing. Refer to the circuit drawing below if using the Aux Lamp Terminal for a lamp or similar device with a different setting.

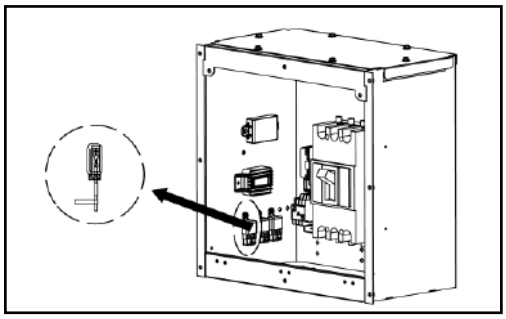

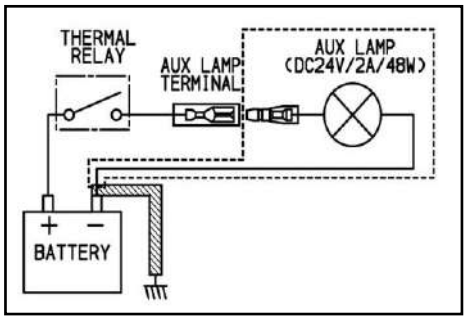

< Note >

- Connect a lamp that is DC24V/2A/48W or less to the Auxiliary Lamp Terminal.
- The pre-caution lamp flashes when more than 80% of the rated output lasts for 20 seconds.

(4) 400/440V output Lamp

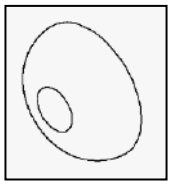

This lamp illuminates if 400/440V are supplied from the output terminal and turns off if 200/220V are supplied. Check the rated voltage of the device being used.

< Note >

- Check that the voltages of the generator output setting, output terminal connection and load power source are consistent.

Switches

(1) Starter Switch

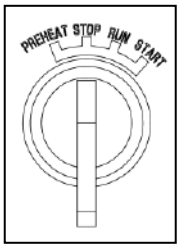

① Stop

When the switch is set to this position, all power will be off.
The switch must be set to this position to remove the key.

② Run/Preheat

The switch must be set to this position during operation.
This position is also used during cold season, to preheat GlowPlug.

< Note >

- Do not leave the switch to this position, while the engine is stopped. Otherwise the battery is discharged.

③ Preheat

This position is used during cold season, to preheat Glow Plug

④ Start

This position is to start the engine. When the key is released, the setting will automatically return to <Run> position.

(2) Frequency Selector Switch

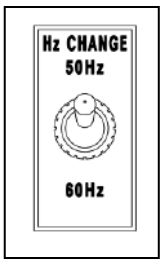

This switch functions a covert the frequency for 50Hz or 60Hz. It locates inside of the operation panel. Loosen the two screws and open the operation panel. The settimg and frequency in equipment shoud be identical.

< Note >

- Control panel should only be opened by an authorized service technician.Extreme caution should be used when opening the control panel to check that no loads are connected before using the frequency switch or touching any components.

(3) Circuit Breaker

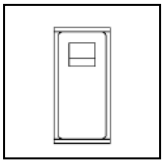

By turning this circuit breaker on the control panel to “ON”, Power will be transferred to the output receptacles and to the load side.
The breaker trips to “OFF”, either overload or short-circuit.

(4) Earth Leakage Relay

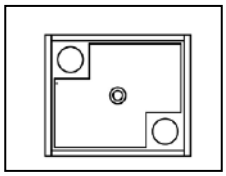

When current leak occurs, it trips to stop power transmission to load.

< Note >

- Do not use this relay as the “ON/OFF” switch to the load.

Voltage Regulator and Throttle Lever

(1) Voltage Regulator

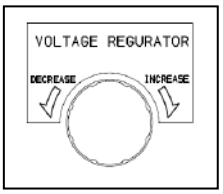

The dial adjusts generator output voltage.
By turning the dial clockwise, an operator can increases the voltage.
By turning the dial counter-clockwise, an operator can decrease the voltage.

(2) Throttle Lever

The throttle lever is to adjust the engine speed.
Set the lever to “IDLING” position when the engine starts and warms up or cools down.
When the rated power is used, set the lever to RUN (50 or 60Hz).

(3) Frequency Adjusting Screw

Set the throttle lever to RUN and loosen the fixing nut.
Frequency increases when turning the screw positions “HIGH”. Position the screw to “LOW” to decrease the frequency.

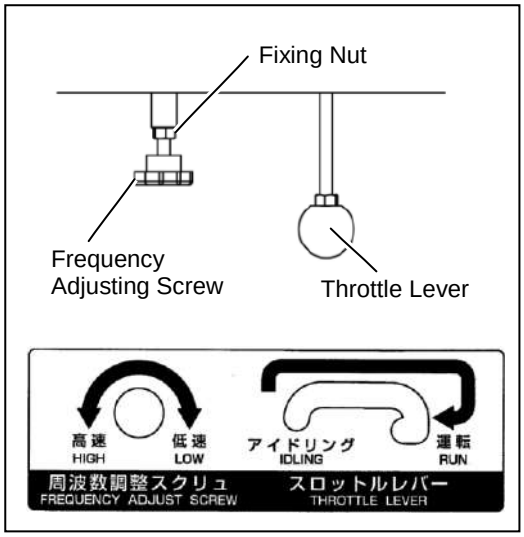

< Note >

- The equipment is set at 50Hz at delivery from the factory. For the 60Hz areas, change to 60Hz according to the above procedure.
- Make sure that the frequency set by selector switch and equipment should be identical.

(4) Ammeter Selector Switch

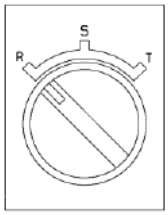

The ammeter selector switch is for selecting the output current displ ayed in ammeter. Change the switch to display the following output terminal current on theammeter.

・Switch Selection

○ “R” :3-phase R phase
○ “S” :3-phase S phase
○ “T” :3-phase T phase

5-3. Fuel Piping Switch (3 Way Valve)

⚠ CAUTION : FIRE

- Always make sure that the engine is stopped when working on piping.
- Always be sure to wipe up any spilled fuel.
- After working on the piping, check that there is no fuel leakage.

Change the 3 way valve to switch to supply fuel from the external tank. In that case, the internal fuel tank is not used.

(1) If using the internal fuel tank

The 3 way valve is turned to the “A” side when the generator is shipped from the factory.

< Note >

- When disconnecting piping from the external tank, turn the lever to the “A” side, and attach the connecting hose to the external tank fuel inlet/return.

(2) If using an external fuel tank

Connect hoses from the external fuel tank to the external fuel inlet and the external fuel return. Change the lever of the 3 way valve to the “B” side to supply fuel from the external tank. (Ref.“**9-5. Connecting with External Fuel Tank**”)

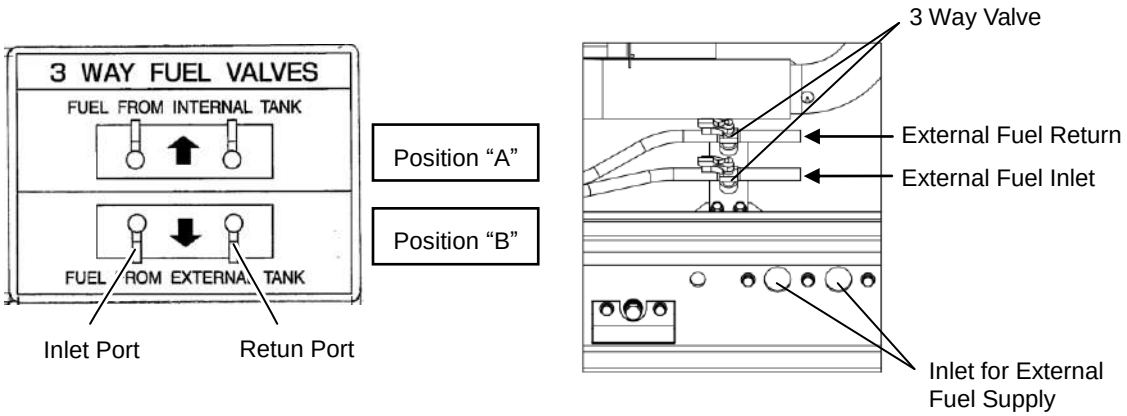

6. Transporting/Installing

6-1. Transport Procedures

⚠ WARNING : INJURY

- Do not lift up the unit using tie down. Use of such could result in the generator falling.
- No persons should be under a lifted generator at all time.

⚠ CAUTION : INJURY

- Always be sure to use lifting hooks when lifting up the generator, and raise it slowly at a completely vertical angle.
- Personnel performing lifting work must wear protective gear such as helmets, safety shoes and gloves.
- Do not move the generator during operation.

(1) Lifting Procedures

Always be sure to use lifting hooks when lifting up the generator, and raise it slowly at a completely vertical angle.

(2) Transport

When transporting this generator, tie rope to the left and right tie downs, and securely fix the generator.

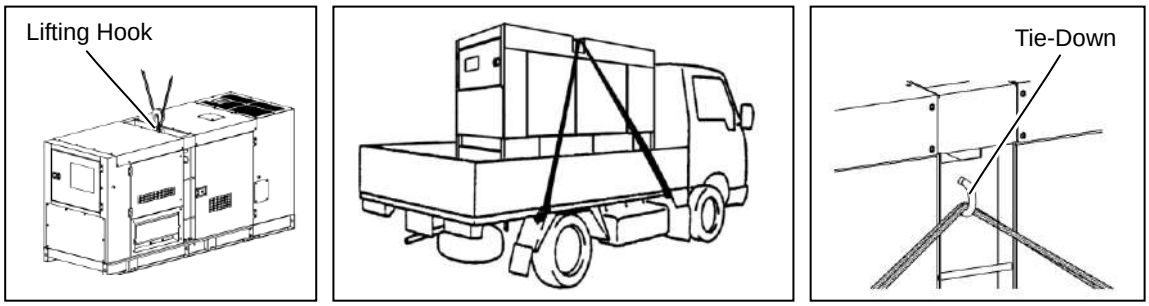

< Note >

- Handle this generator with great care when raising, lowering and transporting. Rough handling of generator can result in damage or malfunction.

6-2. Installation Procedures

⚠ WARNING : EXHAUST GAS POISONING

- Do not operate the generator in poorly ventilated areas such as indoors or tunnels, as the exhaust gas of the engine contains substances that are harmful to human health.
- Do not direct exhaust fumes at pedestrians or buildings.

⚠ CAUTION : FIRE

- Do not carry flammable items (such as fuel, gas and paint) or items that are highly combustible near the generator as the muffler, exhaust gas and other parts become extremely hot.
- Operate this generator 1 m or more from walls or other hindrances, and on a level surface.
- Remove the wood ties if using anchors to secure the generator
- Do not connect the generator output to indoor wiring.

■ If installing this generator, set up barriers or fencing completely around the boundary line of the construction area and take measures to prevent persons not involved in the construction from entering the area.

■ Always set the generator on a hard, flat and leveled surface that serves as the foundation.

■ Keep the generator 1 m or more from walls or other hindrances so that the operation panel door and left/right check doors are accessible for internal inspection/maintenance.

< Note >

- This equipment must be operated on hard and flat surface. Operating under any other conditions may result in malfunctions.
- Do not block the airflow from radiator vent or muffler exhaust. It may result in reduced engine performance, overheating, or damage to the electrical parts.
- Operating in dusty area or salty air (by the ocean), or any other particulate environment may result in clogged radiator, which may cause overheating, other malfunctions and insulation deterioration. Use extreme care, frequent checks and maintenance.

7. Load Connections

7-1. Load Cable Selection

CAUTION : PROPERTY DAMAGE

- Cable burnout can occur due to generated heat if the load current exceeds the allowable current of the cable.
- The voltage drop between cables is large if the cable is excessively long or thin, resulting in decreased input voltage to equipment using the generator, thereby causing decreased performance, faulty operation and malfunction.

Select cable for use that has sufficient thickness and an allowable current possible for use,giving consideration to the distance from the generator to the equipment using the generator.

< Note >

- Select cable with a thickness that ensures that the voltage drop across the cable will be within 5% of the rated voltage.

■ Load Cable Selection Tables

(Ex.) If used voltage is 440V and voltage drops by 22 V.

3-phase: Cabtyre cables

(Unit: AWG)

Length / Current	100 ft (30 m) or less	200 ft (61 m)	300 ft (91 m)	400 ft (122 m)	500 ft (152 m)	600 ft (183 m)
20 A	12	12	12	12	12	12
60 A	12	12	10	8	8	6
100 A	12	8	8	6	4	4
150 A	10	8	6	6	4	1
200 A	10	6	4	4	1	1

(Unit: mm^2)

Length / Current	50 m or less	75 m	100 m	125 m	150 m	200 m
20 A	3.5	3.5	3.5	3.5	3.5	3.5
60 A	3.5	5.5	5.5	8	8	14
100 A	5.5	8	14	14	14	22
150 A	8	14	14	22	22	38
200 A	14	14	22	22	38	38

7-2.Connecting Load Cables

WARNING : ELECTRIC SHOCK

- Before connecting or disconnecting the load cables to/from the output terminal, always turn the output circuit breakers to the “OFF” position, stop the engine, and remove the starter key.
- Close the output terminal cover before operating.
- Do not touch the generator if the Alternator or casing becomes wet during operation.

CAUTION : FIRE

- Do not connect the generator output to indoor wiring.

< Note >

- When connecting a load, check that the generator output setting, output terminal connection position, and load power source are all matching.
- If using the O terminal, be careful that the currents of each phase are uniform.
- Use proper tools when connecting a load to sufficiently tighten the connection. Failure to sufficiently tighten the connection will result in cable burnout.

(1) 3-Phase Output Terminal

■ For 3-phase load

•Terminal voltage is 400/440 V [200/220 V] (50/60Hz).

* The values in brackets are for when set to 200/220V.

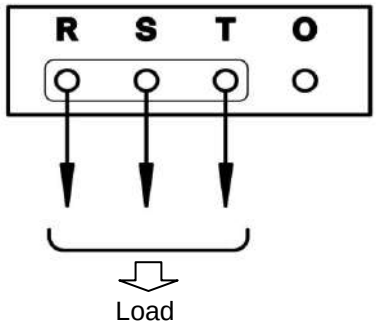

TOTAL 125/150kVA（100/120kW）

■ For 1-phase load

•Terminal voltage is 230/254 V [115/127 V] (50/60Hz).

* The values in brackets are for when set to 200/220V.

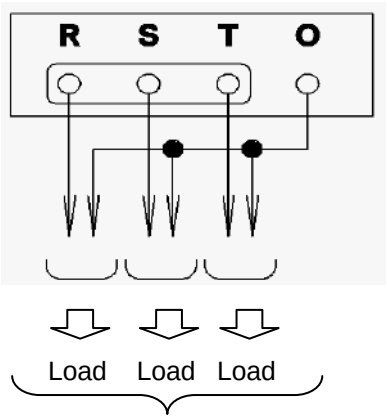

TOTAL 125/150kVA（100/120kW）

■ For 1-phase load

•Terminal voltage is 400/440 V [200/220 V] (50/60Hz).

* The values in brackets are for when set to 200/220V.

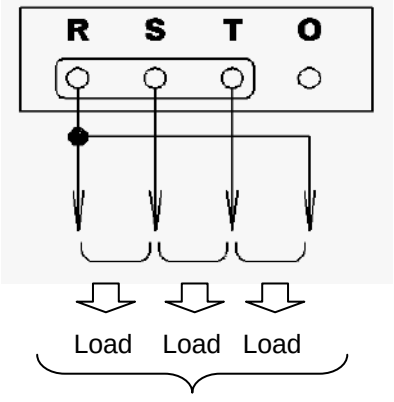

TOTAL 125/150kVA（100/120kW）

7-3. Earth Leakage Relay and Grounding

⚠ WARNING : ELECTRIC SHOCK

- Ground the every grounding terminal to the earth as set in the manual.
- If even one of all is unconnected by mistake or accident, it will be much more dangerous for human than the NO-RELAY case, because leaking current inevitably goes through the body.
- Even though all the bonnets of the loads have been grounded to the earth, the bonnet grounding terminal should be grounded to the earth.
- Grounding should be made after the engine is stopped.
- Whenever the Earth leakage relay is activated, you should always repair the leaking place first of all.

The generator is provided with the earth leakage breaker relay to detect any leakage produced due to such the trouble as insulation failure of the load while the generator is running and to cut off the circuit for protection against any accident such as electrical shock resulting from the trouble.The specification of the earth leakage relay;

- Rated Sensitive Current: 30mA (or below) (Grounding resistance: 500Ω or below)
- Sensitive time: Within 0.1 sec.

(1) Grounding Work

The qualified electrician should perform the grounding of the following 3 points (500Ω or below).

- The Bonnet grounding terminal of the generator.
- The Earth leakage terminal of the generator.
- The Bonnet of the load.

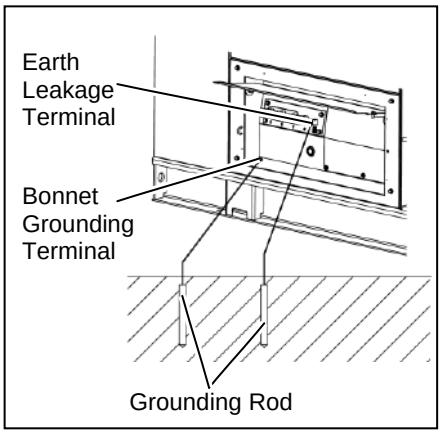

< Note >

- In the event you cannot ground the generator to the earth, consult with the authorized distributor.

(2) Operation Check

⚠ WARNING : ELECTRIC SHOCK

- Before connecting or disconnecting the load cables to/from the output terminal, always turn the output circuit breakers to the “OFF” position, stop the engine, and remove the starter key.
- Close the output terminal cover before operating.
- Do not touch the generator if the generator or casing becomes wet during operation.

Before operating the generator, check always if the device can work.

● Actuation test of the Earth Leakage Relay and Breaker

1. Ensure that the breaker and the switches of loads are positioned to “OFF”.
2. Ensure that the circuit breaker positioned to “OFF”. (Ref."**4-2.Operation Panel**")
3. Following the procedure in **9-1**, **Initial Startup / Pre-Check**,start an engine.

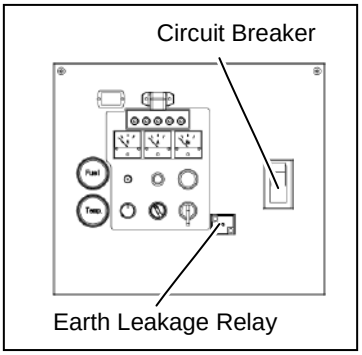

4 Turn the circuit breaker to “ON”.

5 Push the TEST button on Earth Leakage Relay. When the button is pushed, the earth leakage indicator turns “ON” and circuit breakers are positioned in the middle between “ON” and “OFF” positions simultaneously, the device works normally.

6 Push the reset button. The earth leakage indicator turns “OFF” subsequently.

7 Turn (Push-down) the circuit breaker (lever) to “OFF” position.

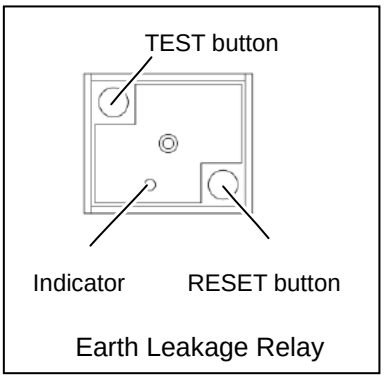

Earth Leakage Relay

In the event you cannot complete every step of the above procedure to the end, the device is out of order. Consult with our authorized distributor or our engineering section and ask to repair.

(3) Earth leakage Relay has activated

If the earth leakage breaker relay has been activated, the earth leakage indicator turns ON, and the breaker (lever) is tripped and positioned in the middle between ON and OFF.
When this occurs, stop the engine and repair the location of earth leakage before restarting operation.（In the case the earth leakage indicating lamp does not turn to ON simultaneously, the cause is Over-Loaded.）

8. Pre-Operation Inspection

⚠ WARNING : ELECTRIC SHOCK/INJURY

- Always be sure to stop the engine and remove the starter key when performing inspection or maintenance.
- Do not open the check door during operation. Keep away from moving parts such as cooling fan and fan belt.

⚠ CAUTION : BURNS

- Do not touch the engine and surrounding components immediately after stopping the engine as they are still extremely hot.

⚠ CAUTION : FIRE

- Always be sure to wipe up any spilled fuel or oil.

8-1. Checking Engine Oil

To check the engine oil, keep the equipment in leveled position, remove the oil level indicator and wipe so that no oil remains, and then re-insert the dipstick fully. Prior to starting the engine, make sure to fill the engine oil through the oil filler until it reaches the MAX line.

< Note >

- Wait approximately five minutes or more after stopping the engine or adding oil before checking the oil level again.
- An accurate oil level reading cannot be obtained if the generator is not placed in leveled position.
- Do not overfill oil to avoid engine damage.

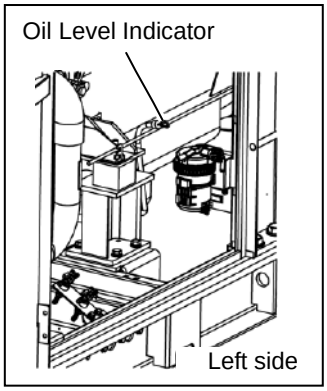

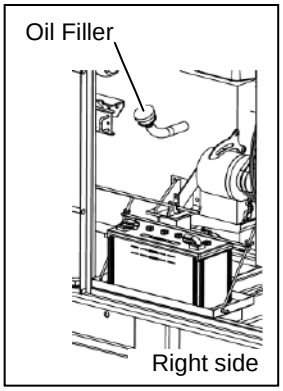

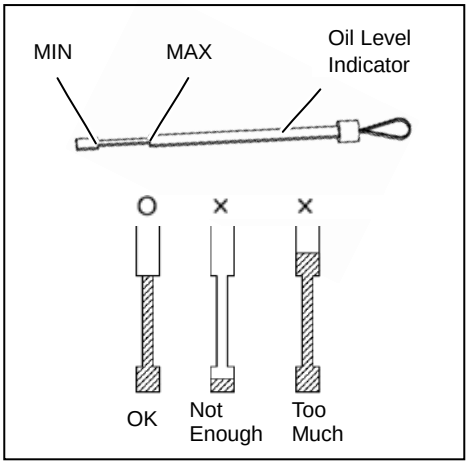

(1) Engine Oil

Only use API Service Classification “CD” or “CF-4” class.

(2) Engine Oil Viscosity

Use a diesel engine oil with an appropriate viscosity corresponding to the ambient temperature (refer to the table).

○ Relation of Viscosity/Temperature

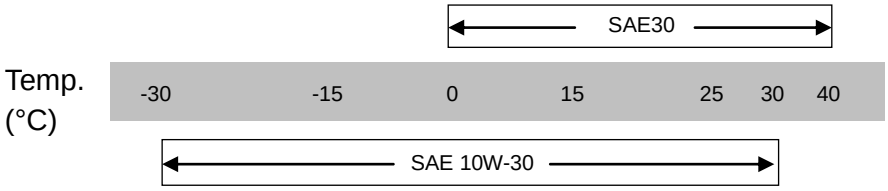

(3) Engine Oil Replacement Amount

(Unit: L)

Total Lubrication Oil Amount
20 (2)

Value in parentheses is the filter capacity.

8-2. Checking Coolant

CAUTION : BURNS

- Do not open the radiator cap immediately after stopping the engine. Do so will result in steam gushing out.
- Hot steam gushes out from the coolant sub-tank if the generator overheats. Do not touch the coolant subtank.

Check that the subtank coolant level is in between FULL and LOW. If the subtank coolant is lower than the LOW level, add coolant to the subtank and radiator.

(1) Filling the Coolant Sub-Tank

1. Remove the coolant sub-tank cap.
2. Fill the sub-tank with coolant until it reaches the FULL line.
3. Re-install the cap.

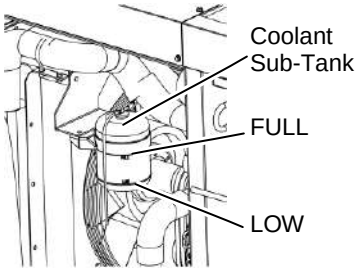

(2) Filling the Radiator

1. Remove the radiator plate and radiator cap.
2. Fill with new coolant through the filler neck until the radiator is full.
3. Re-install and tighten the radiator cap.
4. Re-install the radiator plate.

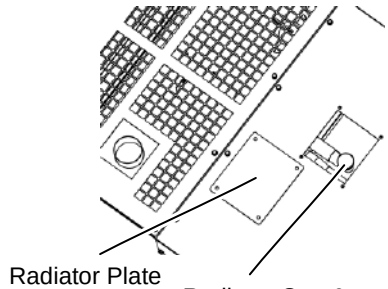

< Note >

- Be sure to only use long life coolant (LLC) for the aluminum radiator. The coolant should be mixed with good quality softened tap water, and contain anti-freezing and anti-rust components.
- The LLC mix ratio is 30% liquid and 70% water when shipped from the factory. (Mitsubishi Genuine LLC)
- Be sure to use the same LLC in the sub-tank.
- The mix ratio should be changed according to the ambient temperature but should remain between 30 and 50%.
- Do not increase the LLC mixture ratio unless necessary. Doing so could result in overheating or another fault/malfunction.
- When replenishing LLC, be sure to use the same brand as the LLC remaining in the radiator and sub-tank.
- Never use an LLC mixture of two different brands.
- Be sure to completely change every two years or 1,000 hours or less.
- LLC is a toxic substance. Wear rubber gloves and other protective wear when handling.
- If someone mistakenly ingests LLC, induce vomiting immediately and seek medical care.
- If LLC gets on skin or clothing, wash with water immediately.
- LLC is flammable. Store in a location where flame is prohibited and it cannot be accessed by children.
- Engine coolant could leak if the radiator is not completely tightened or there is a gap in the seating face. Always be sure to securely tighten the radiator cap.
- Do not add engine coolant past the FULL level line of the coolant sub-tank.

(3) Coolant Amount

(Unit: L)

Total Coolant Amount
26(2.3)

Value in parentheses is the coolant sub-tank capacity.

8-3. Checking the Fan Belt

(1) Fan Belt Tension

Press the fan belt by your finger with approx. 98N. When the belt slick is between 10-15mm, the tension is normal.

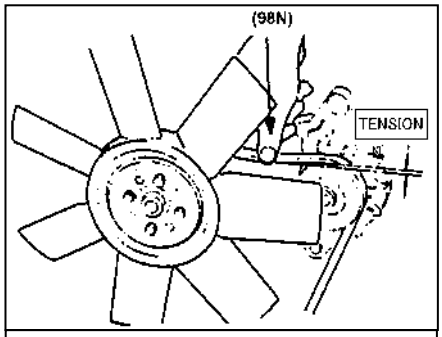

(2) Fan Belt Condition

Visually inspect the belts for signs of wear, missing grooves, slick or any damage. Replace the belts if any damage is found.

(3) Fan Belt Adjustment

1. Loosen the mounting bolts that locates on the upper and lower position in the alternator.
2. Insert a wrench or a breaker bar under the alternator and pull the alternator by the wrench or abreaker bar.
3. Retighten the two mounting bolts.
4. Check the belt tension. If the belt is not tighten enough, loosen the alternator bolts and try again.

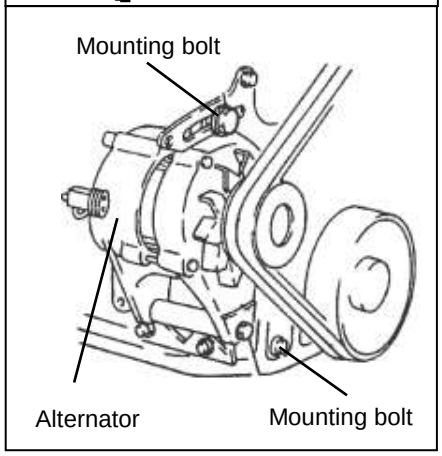

< Note >

- If the belts have been damaged or is showing signs of excessive wear, it should be replaced instead of simply tightened.

(4) Replacing the Fan Belt

Contact a local dealer to replace the fan belt.

< Note >

- Slick spots can cause a belt to slip and may be precursors to overheating and cracking.
- NEVER operate the generator without the belt guard has been removed.

8-4. Checking the Fuel

⚠ CAUTION : FIRE

- This generator uses diesel fuel. Always be sure to stop the engine and not bring flames close when inspecting fuel or refueling. Wait until the engine has cooled before performing such procedures.

Check if there is a sufficient amount of fuel and add fuel if insufficient. The fuel meter on the control panel will only display the fuel level for the internal fuel tank.

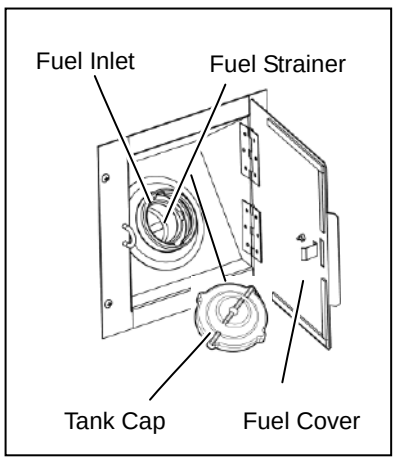

< Note >

- Use Diesel fuel, ASTM D975 No.2-D in the event ambient temperature reaches down to –5 °C.
- The fuel supply pump, injectors and other parts of the fuel system and engine can be damaged if any fuel or fuel additives are used other than those specifically recommended by the engine manufacturer.
- Always use the Diesel Fuel Strainer.
- Fill the fuel tank slightly less than the FULL tank level.

8-5. Checking for Fuel, Oil and Coolant Leaks

⚠ CAUTION : FIRE

- If fuel or oil is leaking, repair the leaking location before operating.

Open the check door and check for fuel, oil and coolant leakage from fuel piping connections and similar locations.

8-6. Checking the Battery

⚠ CAUTION : EYE/SKIN INJURY

- Wear rubber gloves and other protective wear to protect eyes, skin and clothing from the battery fluid which contains diluted sulfuric acid. If the battery fluid contacts eyes or skin, wash out immediately with a large amount of water. Be sure to receive medical treatment, especially if the fluid contacts the eyes.

⚠ CAUTION : EXPLOSION

- Never use or recharge the battery if the fluid level is below the minimum level.
- Do not create sparks or bring flame near the battery as it generates flammable gas.

1. Check the fluid level, and add distilled water when it is near the lower level until it reaches the upper level.
2. Check the terminals for looseness and tighten if loose.

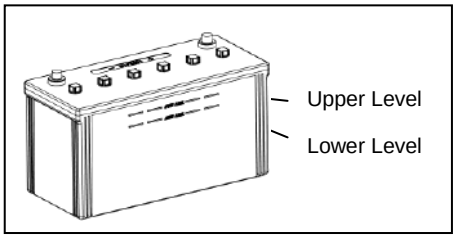

< Note >

- It is necessary to recharge the battery when the specific gravity of the battery fluid is 1.23 or less. Request the authorized distributor where the generator was purchased to recharge the battery.

■ Replacing the Battery

Two batteries are connected in series order. Whenever you replace battery or disconnect cables, always proceed with the following steps, otherwise battery may short-circuit.

8.6.1 Replacing the battery installed on the right side toward the control panel

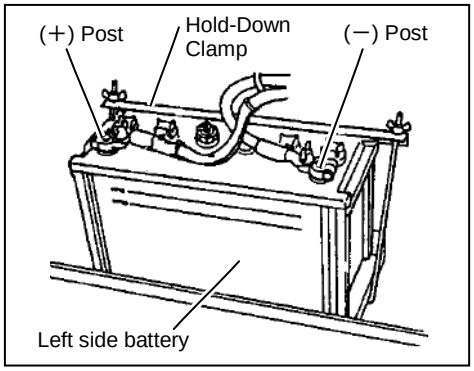

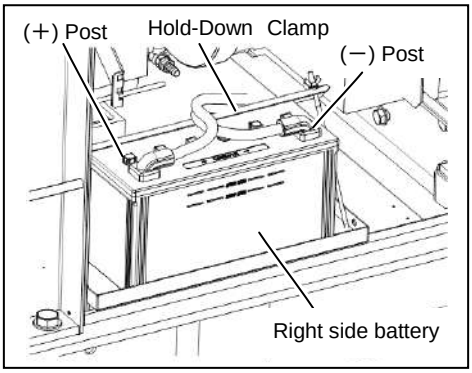

1. Remove the clamp and cable from **negative (-)** post from the battery on the **left** side. (Always remove negative side first.)
2. Remove the clamp and cable from **positive (+)** post from the battery on the **left** side.
3. Remove the clamp and cable from **negative (-)** post from the battery on the **right** side. (always remove negative side first.)

4 Remove the hold-down clamp from the battery on the **right** side.

5 Remove the clamp and cable from **positive (+)** post from the battery on the **right** side. Remove the **right** side battery from the seat.

※Reinstall the new battery in the reverse order. (always install the cable to the **positive (+)** post of the new battery first.)

8.6.2 Replacing the battery installed on the left side toward the control panel

1 Remove the clamp and cable from **negative (-)** post from the battery on the **left** side. (always remove negative side first.)

2 Remove the hold-down clamp from the battery on the **left** side.

3 Remove the clamp and cable from **positive (+)** post from the battery on the **left** side.

4 Remove the **left** side battery from the seat.

※Reinstall the new battery in the reverse order (always install the cable to the positive (+) post of the new battery first.

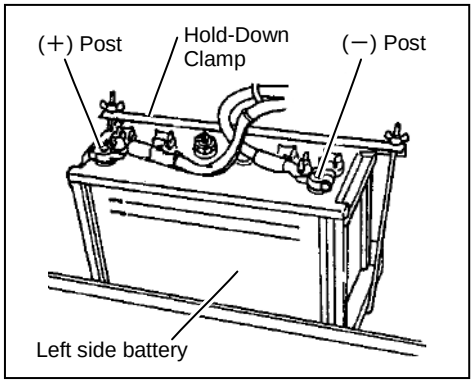

9. Operating Procedures

9-1. Initial Startup/Pre-Check

⚠ WARNING : EXHAUST GAS POISONING

- Do not operate the generator in poorly ventilated areas such as an indoors or tunnels, as the exhaust gas of the engine contains substances that are harmful to human health.
- Do not direct exhaust fumes at bystanders or buildings.

⚠ WARNING : INJURY

- Always be sure to check that the breaker on load side and switches for any equipment using the generator are at “OFF” before turning the breaker to “ON”. Also be sure to advise personnel on the load side that power will be turned on before operating the breaker.
- Close all doors and lock them during operation.

⚠ CAUTION : FIRE

- Do not carry flammable items (such as fuel, gas and paint) or items that are highly combustible near the generator as the muffler, exhaust gas and other parts become extremely hot.
- Position this generator 1 m or more from walls or other hindrances, and on a level surface.

⚠ CAUTION : INJURY

- Do not operate the generator if it has been modified or any parts have been removed.
- Position the generator on a level stable surface so that it cannot slide or move in any manner.
- Before starting operation, always be sure to turn off all switches of equipment being used and breaker to “OFF”.

< Note >

- Check that the surrounding area is safe before starting the engine.
- When there are multiple workers who are working together, they must mutually signal each other before starting the engine.
- Do not use in an area with high temperature or humidity, or an area with a large amount of dust.
- Do not open any doors during operation. Operating with door open can negatively affect cooling effect, resulting in an equipment malfunction.
- Use ear protection if the level of noise is high. Failure to do so could result in hearing damage.
- Please be careful about a strong wind and the opening and shutting of the door at the sloping place enough. A door is open suddenly and is closed, and a finger might be sandwiched.

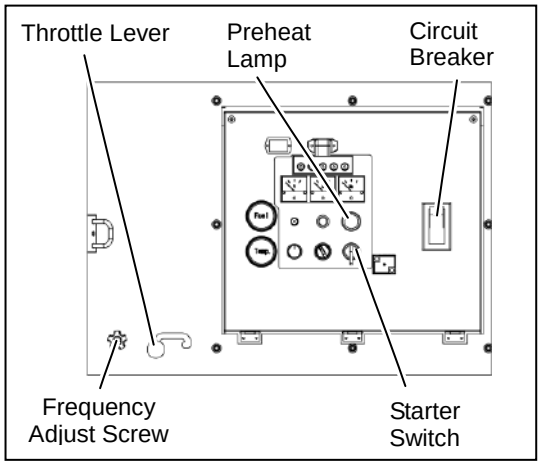

1. Turn the circuit breaker in the operation panel to “OFF”.
2. Check that the frequency set by the selector switch and equipment shoud be identical.

   < Note >

   - Frequency being set at the frequency selector switch and actual output shall be reconciled otherwise it cannot preserve the rated voltage.
3. Set the throttle lever to “IDLING”.
4. Turn the starter switch to “START”, and start the engine.

   < Note >

   - In a cold environmental condition, turn the starter switch to “PREHEAT” position.The glow lamp converts to red after approx. 15 sec., after preheating completes.
   - Do not leave the starter key at “PREHEAT” over 30 sec. otherwise it may damage the preheating feature.
   - Do not continue operation the starter motor for 10 sec. or more.
   - Remain an interval for 30 sec. each at least if the starter should continuously operated.
5. After starting the engine, remove your hand from the starter switch.
6. Let engine idles for approximately for five minutes.
7. Set the throttle lever to “RUN” and adjust frequency with the frequency adjust screw.

Rated frequency	No-load frequency
50Hz(1,500min^{-1})	52.5Hz(1,575min^{-1})
60Hz(1,800min^{-1})	63.0Hz(1,890min^{-1})

8. Adjust the voltage regulator dial to the specified voltage.

50Hz Operation	400V [200V]
60Hz Operation	440V [220V]

* The values in brackets are for when set to 200/220V.

9. Turn the breaker to “ON to start AC power delivery.

9-2. Procedures during Operation

(1) Checks after Startup

- Make sure that all meters and indicators are in normal status. (Ref. "**5. Equipment**")
- Check that there is no abnormal vibration or noise.
- Check that the exhaust gas color is normal. When operation is normal, the exhaust gas should be colorless or slightly bluish.

< Note >

- If abnormal, stop using this generator and request authorized distributor where the generator was purchased to repair the generator.

(2) Adjustment during Operation

During load operation, check the voltmeter and finely adjust voltage using the voltage regulator dial.

■ Bleeding air from the fuel system when the engine stops due to running out of fuel

If air enters the fuel system, it must be expelled in accordance with the following procedure before the engine can be started. It is not sufficient only to fill the fuel tank.

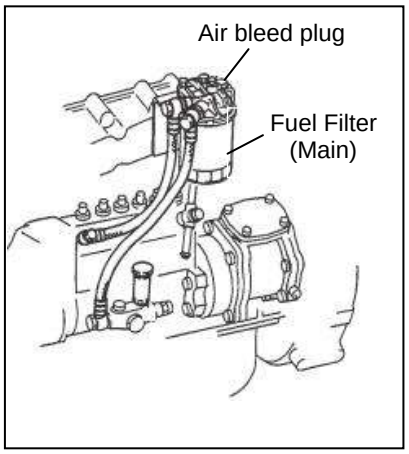

1. Refuel.
2. Turn the starter switch to "RUN" and activate the electromagnetic pump. Do not turn the starter key to "START" and start the engine.
3. Loosen the air bleed plug mounted the fuel filter. Cover the the air bleed plug with a soft cloth.
4. Tighten the air bleed plug after babbles are not confirmed visually.

Air bleeder plug tightening torque
8 ~ 12 N·m(0.8 ~ 1.2 kgf·m)

Do not overtorque the air bleed plug.

5. Wipe and clean if it spilled fuel.
6. Set the throttle lever to "IDLING". Start the engine. Repeat the stop #3 if the engine did not start.
7. Start the engine and check that the air is bled off completely from the fuel system. The fuel injection pump will be air-bled automatically when the engine is started.
8. Make sure that there is no leaking the fuel from the seal point.

9-3. Stopping Operation

⚠ CAUTION : BURNS

- Do not touch the engine and surrounding components immediately after stopping the engine as they are still hot.

1. Turn the switches and breakers on the load side to “OFF”.
2. Turn the circuit breaker on the operation panel to “OFF”.
3. Set the throttle lever to “IDLING”.
4. The engine cools down for approximately 3 minutes.
5. Turn the starter switch to “STOP”.

9-4. Protective Functions

⚠ WARNING : INJURY

- Do not open the check door during operation. Be careful of pinching or catching of moving parts such as the cooling fan and fan belt.
- Always be sure to stop the engine and remove the starter key when performing inspection or maintenance.

⚠ CAUTION : BURNS

- Do not open the check door during operation. Keep away from moving parts such as cooling fan and fan belt.
- Hot steam gushes out from the coolant subtank if the generator overheats. Do not touch the coolant subtank.

This generator is equipped with functions to automatically stop operation when there is a fault/malfunction during operation, and one to warn the operator of the fault location by use of indicator lamps. Check the fault location when the engine is automatically stopped or an indicator lamp lights up to stop the engine.

Protection Feature List

No.	Action / Abnormality		Earth Leakage Relay Active	Breaker Trip	Engine Automatic Shutdown	Warning Indicator Blinking.	Cause
1	Monitor Lamp	High Water Temperature	–	–	○	○	Activates due to high water temperature in the engine. Default 100°C
2		Low Oil Pressure	–	–	○	○	Activate due to low oil pressure in the engine. Default 0.98 × 100 kPa
3		Battery Charge Insufficient	–	–	–	○	Activates in battery charge Impossible.
4		Air Filter Clogging Up	–	–	–	○	The element is clogged making it necessary to clean or replace the element.
5		Water Separator Fluid Level	–	–	–	○	When the water separator is full of water.
6	Current Leakage		○	○	–	–	Activates in current leakage.
7	Overload		–	○	–	○	Activates in overload. Flashes when at approx 80% of rated output. Load rejection when the rated output is exceeded.

* ○ indicates the automatic activation.

9-5. Connecting with External Fuel Tank

CAUTION : FIRE

- Always make sure that the engine is stopped when working on piping.
- Always be sure to wipe up any spilled fuel.
- After working on the piping, check that there is no fuel leakage.

1. Turn the 3 way valve toward position “A”. (to supply fuel from the internal tank.)
2. Remove the connecting hose from the 3 way valve.
3. Remove the plate.
4. Pass the fuel hose from the external tank through the inlet for the external fuel supply and connect the inlet and outlet valve in the 3 way valve.
5. Turn the 3 way valve lever to the position “B”. (to supply fuel from the external tank.)
6. Bleed air from the hoses from the external tank. Steps to supply fuel from the external tank completed.

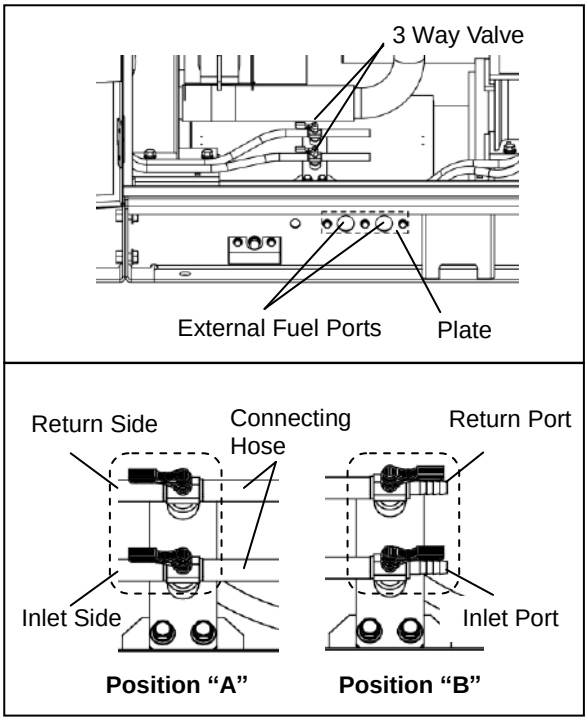

< Note >

- Protect the piping connecting the external fuel tank and this generator with corrugate tubing or similar in order to prevent interference between the generator internal parts and the external fuel ports.
- If using a hose for the piping, use oil-resistant hose with an internal diameter of 8 to 9 mm.
- Set the fuel level of the external fuel tank from 0 to 3 m from the underside of this generator. The fuel level of the external fuel tank being lower than this generator will result in poor engine operation or stoppage.

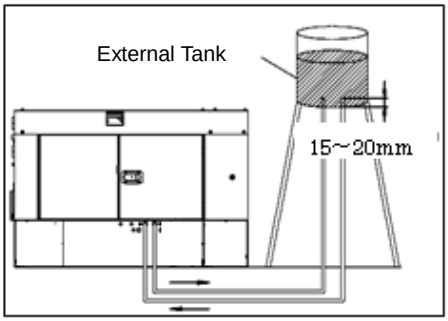

- Turn the 3 way valve lever to the “A” side in order to prevent fuel from flowing out from the external tank fuel inlet/return.
- Turn the lever completely as far as possible. If the lever is not completely pressed to either side, it might not be possible to supply fuel causing the engine to stop.
- Extend the supply side outlet 15 to 20 mm above the bottom of the external tank in order to prevent foreign material or water from being suctioned.
- Set the external fuel tank return side inlet as same height as the supply side in order to prevent poor engine operation due to air mixed in with the fuel.
- Refer to section “**9-2.(2) Adjustment during Operation**” for air bleeding.
- Some air may remain in hoses or pipes immediately after connecting the external fuel tank resulting in unstable engine speed and engine stoppage.
- Do not leave the generator unattended for unmanned operation until you have confirmed that the engine speed is stable.

10. Inspection/Maintenance

⚠ WARNING : ELECTRIC SHOCK/INJURY

- Do not touch output terminals or internal electric parts while the generator is operating.
- Do not open the check door during operation. Keep away from moving parts such as cooling fan and fan belt.
- Always be sure to stop the engine and remove the starter key when performing inspection or maintenance.
- Do not lift up using tie downs. Use of such could result in the generator falling.
- No persons should be under a suspended generator at all time.

⚠ CAUTION : FIRE

- Always be sure to wipe up any spilled fuel or oil.

⚠ CAUTION : BURNS

- Do not touch the engine and surrounding components immediately after stopping the engine as they are still hot.
- Do not open the radiator cap immediately after stopping the engine. Do so will result in steam gushing out.
- Hot steam gushes out from the coolant subtank if the generator overheats. Do not touch the coolant subtank.

⚠ CAUTION : INJURY

- Personnel performing suspension work must wear protective gear such as helmets, safety shoes and gloves.
- Always be sure to use lifting hooks when suspending the generator, and raise it slowly at a completely vertical angle.

Perform periodic inspection and maintenance according to the following table in order to constantly maintain this generator in good working condition. Use the hour meter as a reference for the operating time.

< Note >

- All procedures except for pre-operation inspection should be performed by specialized technicians.
- Request authorized distributor where the generator was purchased to perform the procedures in the table with a "●".
- Always be sure to use genuine parts or those indicated specifically for replacement parts.
- Use a container to catch fluid bled from this generator that is large enough to prevent the fluid from spilling on the ground.Dispose of oil, fuel, coolant (LLC), filter, battery and other hazardous materials according to laws and regulations concerning industrial waste.Contact authorized distributor where the generator was purchased if you have any inquiries regarding proper disposal.
- When check doors are open during maintenance, take measures so that unrelated personnel cannot accidentally come close to the generator. Close all doors and covers if you are going to be away from this generator.
- Please be careful about a strong wind and the opening and shutting of the door at the sloping place enough. When door is opened or closed suddenly, a finger might be sandwiched.

	Description	Daily	Every 250 hrs.	Every 500 hrs.	Every 1,000 hrs.
Engine	Each parts (Clean/Tightening)	○			
	Engine oil (Check/Add)	○			
	Engine oil (Replace)	○ 1st time at 60 hrs.	○		
	Oil filter (Replace)	○ 1st time at 60 hrs.		○	
	Coolant (Check/Add)	○			
	Coolant (Replace/ Radiator Flush)				○ or 2 years
	Exhaust color (Check)	○			
	Water separator (Check/Drain excess water and sediments)	○	○ (Drain)		
	Water separator/element (Replace)			○	
	Fuel filter/element (Replace)			○	
	Fuel tank (Drain water)		○		
	Fuel tank (Clean)			●	
	Clean gauze filter in engine feed pump			○ (Clean)	
	Check for leaks (Fuel/Oil/Coolant)	○			
	Fuel/Cooling Water/Oil Hoses and Anti-Vibration Rubber (Replace)				● or 1 year
	Air filter element (Clean/Replace)		○ (Clean)		○ (Replace)
	Battery fluid level (Check/Add)	○			
	Battery gravity (Check)	○			
	Fan belt tension (Check)	○			
	Fan belt (Replace)			●	
	Radiator and Intercooler (Clean)			●	
	Valve clearance (Check/Adjust)				●
	Fuel injector (Check)				●
	Elimination of carbon in the exhaust pipe line and muffler		○		
Generator	Indicators, Gauges Alarms (Check)	○			
	Operation check of Earth Leakage Relay	○			
	Grounding resistance check	○			
	Insulation test		○		

(1) Engine Oil Replacement

First Time	60 hrs.
Thereafter	Every 250 hrs.

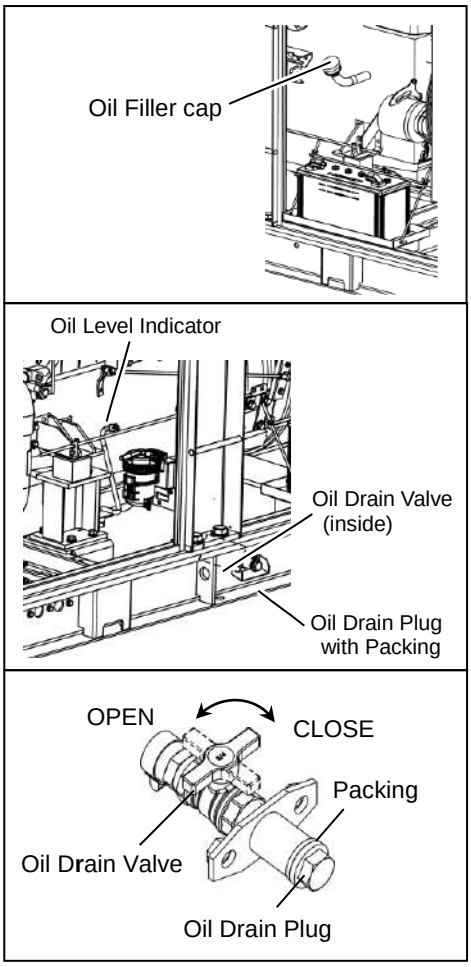

1. Place a suitable pan under the oil drain plug.
2. Remove the oil filler cap.
3. Remove the oil drain plug together with a packing. Turn and open the oil drain valve and drain the engine oil.
4. Close the oil drain valve after drained. Retighten the oil drain plug together with a new packing.Do not reuse the packing. Packing part no.:V106-000210
5. Add oil through the oil filler until it is at the maximum level while checking the oil level using the oil level indicator.
6. Attach the oil filler cap.

< Note >

- Refer to section "**8-1. Checking Engine Oil**" for engine oil replacement amounts and types.
- After reinserting the oil drain plug and shortly after starting the engine, be sure to always check that there is no oil leakage.

(2) Replacing the Oil Filter

Fist time	60 hrs.
Thereafter	Every 500 hrs.

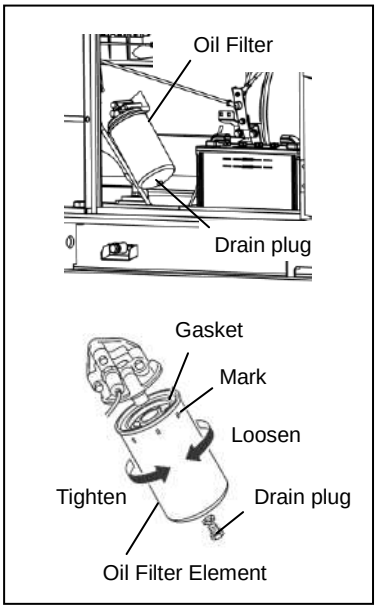

1. Drain the engine oil. (Ref."**(1) Engine Oil Replacement**")
2. Place a suitable pan under the oil filter to collect receive the oil when it is drained out. Remeve the drain plug and drain the oil in the filter.
3. Remove the oil filter element by a filter remover.
4. Use the Mitsubishi genuine oil filter element. Oil filter element part no.:ME130968 (Mitsubishi part no.)
5. Apply oil to the surface of the gasket.
6. Insert the oil filter element by hand until the gasket contacts the seal surface. (Do not use a filter wrench.)
7. Turn the filter element by 1・1/8 to 1・3/8 turns to clockwise. Use the markings in the filter element for reference.
8. Add new lubricant oil. Wipe off the spilled fuel.
9. Start the engine. Make sure that there is no leaking the oil from the sealing point.

< Note >

- Contact a local dealer if you are unsure to step the procedure above or if you do not have a filter remover.
- When attaching the Element, check that there is no foreign material adhering to the gasket.

(3) Air Filter Element Cleaning/Replacement

Clean	250 hrs.
Replace	Every 1000 hrs.

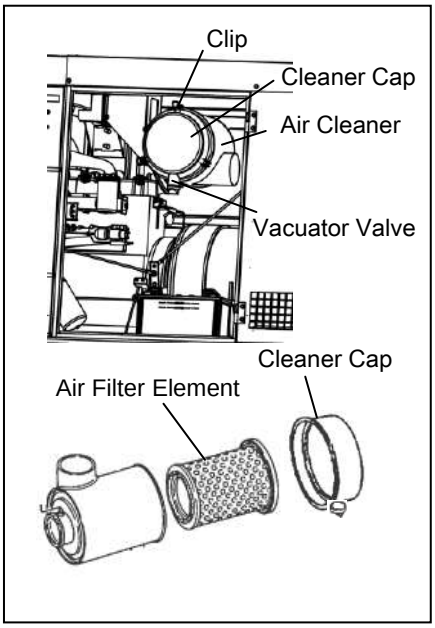

1. Remove the air cleaner clips and cleaner.
2. Remove the air filter element.
3. Clean or replace the air filter element, and reinstall it in reverse order. Air filter element part no.: ME442325 (Mitsubishi part no.)

< Note >

- Always be sure to turn the cleaner cap in the direction indicated by the arrow.
- Replace the elements earlier if using in an excessively dusty location.
- Do not add oil as this generator uses a dry element.
- Clear foreign material by pinching the vacuator valve once a week in normal operating conditions or daily if operating in a location that is excessively dirty or dusty. Wipe away any dirt or moisture that has adhered to the parts.
- Never touch the elements for any reason except cleaning.

■ Cleaning the air filter element
If dry dust is adhering. : Blow compressed air from inside the element.
If carbon or oil is adhering : Replace with new parts.

(4) Draining Water from the Water Separator

Check	Daily
Clean	Clean every 250hrs. or when the warning lamp “WATER SEPARATOR” is blinking.

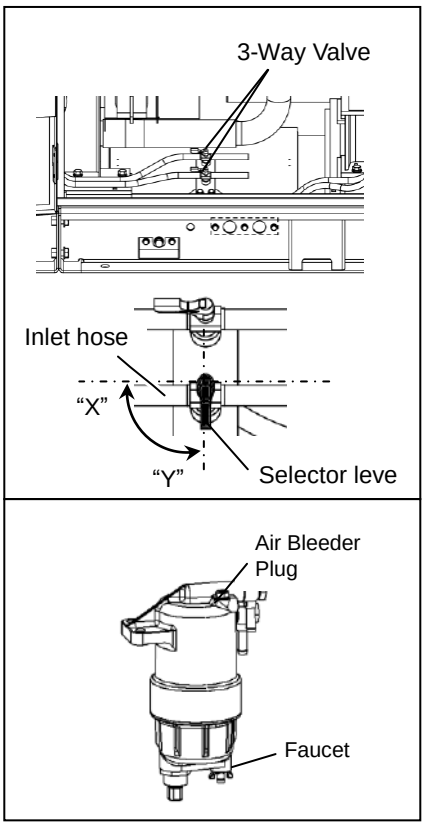

1. Turn the selector lever mounted the inlet hose in 3- way valve to “Y” direction. So the fuel supply from the internal tank is cut.
2. Set a container to catch spilled water.
3. Loosen the air bleeder plug of the fuel filter sufficiently.
4. Loosen the faucet on the bottom to drain water.
5. Tighten the faucet and the air-bleeding plug after drained the water.

Faucet tightening torque
1.5 ~ 2.5 N·m(0.15 ~ 0.25 kgf·m)
Air bleeding plug tightening torque
8 ~ 12 N·m(0.8 ~ 1.2 kgf·m)

Do not overtorque the drain plug and air bleeder plug.

6. **Turn** the selector lever to "X" direction.
7. Bleed air to the fuel system. (Ref.“**9-2.(2) Adjustment during Operation**”)
8. Start the engine. Make sure that there is no leaking the oil from the sealing point.

< Note >

- When the outer case is filled with water, drain and separate water from the fuel tank. (Ref.“**10.(7) Draining Water from the Fuel Tank**”)

(5) Pre Fuel Filter Replacement (Water Separator)

Replace	Every 500 hrs.

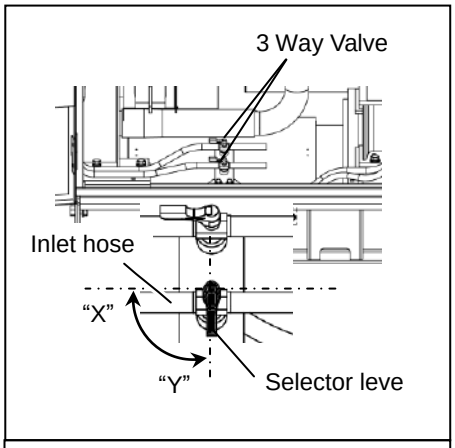

1. Turn the selector lever mounted the inlet hose in 3 way valve to "Y" direction. So the fuel supply from the internal tank is cut.
2. Set a container to catch spilled fuel.
3. Loosen the air bleeder plug of the fuel filter sufficiently.
4. Loosen the faucet on the bottom to drain the fuel.
5. Remove the fuel filter element.
6. Install the new fuel filter element.
7. Replace the O-ring of the outer case.
8. Spread a thin layer of fuel on a new O-ring.
9. Thread the outer case by hand, (do not use a filter wrench) and it in until the O-ring contacts the seal surface, and then tighten it using the special filter wrench.
10. Tighten the drain plug on the bottom and the air-bleeding plug.

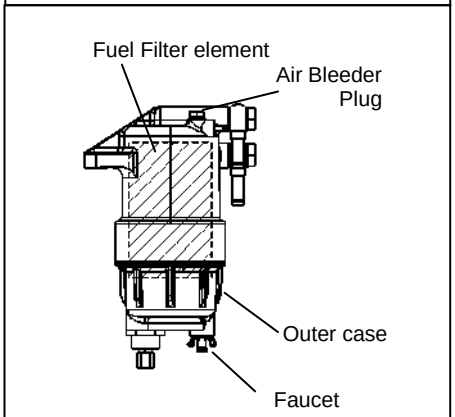

Drain plug tightening torque
1.5 ~ 2.5 N·m(0.15 ~ 0.25 kgf·m)
Air bleeding plug tightening torque
8 ~ 12 N·m(0.8 ~ 1.2 kgf·m)
Outer case tightening torque
18 ~ 22 N·m(1.8 ~ 2.2 kgf·m)

Do not overtorque the drain plug and air bleeder plug.

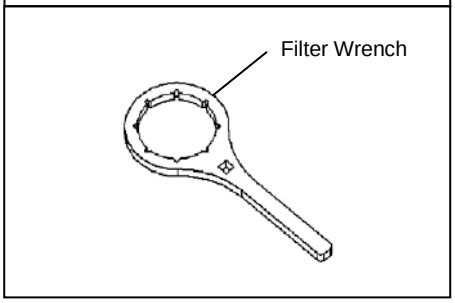

11. Turn the selector lever mounted the inlet hose in 3 way valve to "X" direction. So the fuel path from the internal tank is reopened.
12. Wipe off the spilled fuel on any component.
13. Bleed the air from the fuel system. (Ref."**9-2.(2) Adjustment during Operation**")
14. Start the engine. Make sure that there is no leaking the fuel from the sealing point.

< Note >

- When attaching the outer case, check that there is no foreign material adhering to the O-ring.
- After attaching, be sure to always start the engine and check that there is no fuel leakage.
- If water is accumulate in the cup, draining water from the fuel tank and the water separator.
- Filter element (Including O-ring) part no.: G260-000120
- Filter Wrench part no.: X602-000450

(6) Fuel Filter Replacement（Main Filter）

Replace	Every 500 hrs.

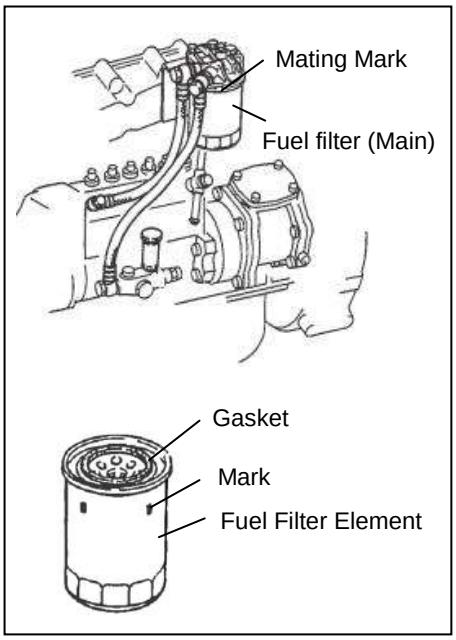

1. Remove the fuel filter element by a filter remover.
2. Use the Mitsubishi genuine fuel filter element.
   Fuel filter element part no. :ME056670(Mitsubishi part no.)
3. Apply fuel to the gasket in the fuel filter element.
4. Install the oil filter by hand until the gasket contacts the seal surface.
5. Tighten the filter by 2/3 turn to clockwise with filter wrench.
6. Start the engine. Make sure that there is no leaked fuel from the seal point.

< Note >

- When attaching the Element, check that there is no foreign material adhering to the gasket.

(7) Draining Water from the Fuel Tank

Drain Water	Every 250 hrs.

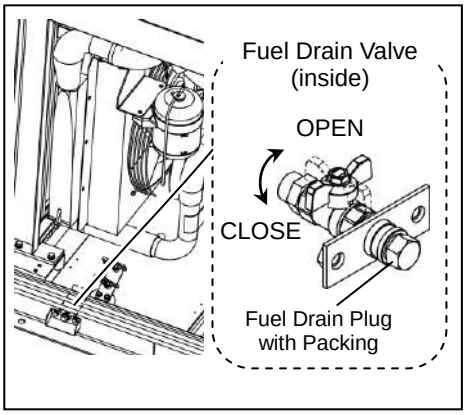

1. Place a suitable pan under the drain plug.
2. Remove the fuel drain plug together with a packing. Turn and open the fuel drain valve and drain the water.
3. Close the drain valve after drained. Retighten the fuel drain plug together with a new packing. Do not reuse the packing.
   Packing part no.:V106-000190
4. Make sure that there is no leaking the fuel from the seal point.

(8) Coolant Replacement

Replace	Every 2 yrs. or Every 1000 hrs. (whichever come first)

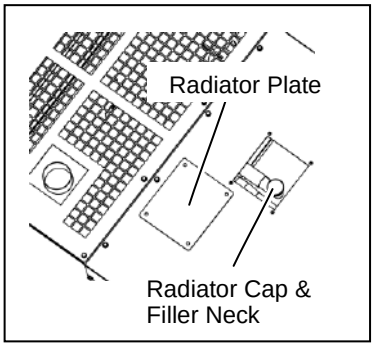

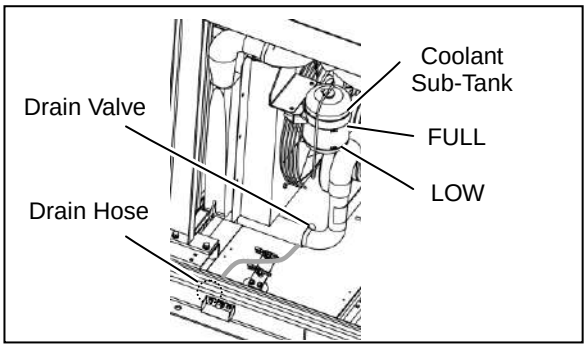

1. Place a suitable pan under the drain hose.
2. Remove the radiator plate and the radiator cap.
3. Loosen the drain valve.
4. Retighten the drain valve after drained.
5. Remove the coolant sub-tank and drain coolant from the sub-tank, if necessary.

6 Reinstall the sub-tank and fill the sub-tank with new coolant to “FULL” marking in the sub-tank.

7 Fill the radiator with new coolant to the opening of the radiator cap. Use a jug if necessary.Fill the radiator with coolant/water to the top.

8 Reinstall the radiator cap and fasten the radiator plate.

9 Make sure that there is no leaking after reinstalled the drain plug.

< Note >

- Refer to section “**8-2. Checking Coolant**” for more information.

(9) Elimination of carbon in the exhaust pipe line and muffler

⚠ WARNING : EXHAUST GAS POISONING

- Do not operate the generator in poorly ventilated areas such as an indoors or tunnels, as the exhaust gas of the engine contains substances that are harmful to human health.
- Do not direct exhaust fumes at bystanders or buildings.

⚠ WARNING : INJURY

- Always be sure to check that the breakers on load side and switches for any equipment using the generator are at “OFF” before turning the breaker to “ON. Also be sure to advise personnel on the load side that power will be turned on before operating the breaker.
- Close all doors and lock them during operation.

⚠ CAUTION : FIRE

- Do not carry flammable items (such as fuel, gas and paint) or items that are highly combustible near the generator as the muffler, exhaust gas and other parts become extremely hot.
- Position this generator 1 m or more from walls or other hindrances, and on a level surface.

⚠ CAUTION : INJURY

- Do not operate the generator if it has been modified or any parts have been removed.
- Position the generator on a level stable surface so that it cannot slide or move in any manner.
- Before starting operation, always be sure to turn off all switches of equipment being used and all breakers to “OFF”.

Clean	Every 250 hours

The carbon will be easier to be accumulated when the unit runs at less than 30% of rated output. Accumulation of carbon (soot, unburned fuel) in the exhaust system could cause only a system decrease or an engine fault occurs. To eliminate soot and unburned fuel, run the unit at more than 70% of the rated output for about half an hour, until the exhaust gas become mostly colorless.

< Note >

- When the unit runs at rated power suddenly, accumulation of carbon in the exhaust system might cause back fire incident. Operate the generator starting from 50% of the rated output and then increase load gradually after confirming exhaust gas become colorless. Do not carry flammable items that are highly combustible near the generator.

11. Long-Term Storage

WARNING : INJURY

- Always be sure to stop the engine and remove the starter key when performing inspection or maintenance.

CAUTION : FIRE

- Always be sure to wipe up any spilled fuel or oil.
- Allow the generator to cool before covering with the protective cover.

CAUTION : BURNS

- Do not touch the engine and surrounding components immediately after stopping the engine as they are still extremely hot.

(1) Storage Procedures

Perform the following maintenance procedures before storing this generator if it is not going to be used for two months or more.

1. Remove the battery.
   (Ref.“**8-6. Checking the Battery Replacing the Battery**”)
2. Replace the engine oil.
   (Ref.“**10. Inspection/Maintenance (1) Engine Oil Replacement**”)
3. Drain the fuel from the fuel tank and filter.
   (Ref.“**10. Inspection/Maintenance (4)Draining Water from the Water Separator**”)
   (Ref.“1**0. Inspection/Maintenance (9) Draining Water from the Fuel Tank**”)
4. Remove the starter key and store in a secure location.
5. Clean up all generator components, and store in a dry and dust-free location. Also cover when storing so that rain cannot enter through the suction or exhaust ports.

< Note >

- Adjust the fluid of the removed battery to the appropriate level and recharge approximately every month.

(2) Double-Stacking Procedures

⚠ WARNING : INJURY

Always be sure to observe the following items when double stacking this generator in a warehouse or similar location.

- Check that the hood of this generator is not dented, and that bolts are not loose or missing.
- Set in a location with a flat hard floor capable of withstanding the double-stacking weight.
- Always be sure to use lifting hooks when lifting this generator.
- Insert wood ties of the same size and that are wider than this generator between each generator, and set another generator on top of the ties.
- Never stack more than two levels, and do not set a generator on top that is larger in weight/size than that on the bottom.
- Do not operate the generator when it is double stacked.

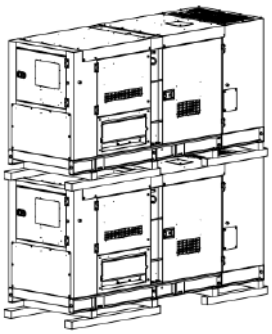

12. Troubleshooting

⚠ WARNING : ELECTRIC SHOCK/INJURY

- Do not touch output terminals or internal electric parts while the generator is operating.
- Do not open the check door during operation. Keep away from moving parts such as cooling fan and fan belt.
- Always be sure to stop the engine and remove the starter key when performing inspection or maintenance.

⚠ CAUTION : FIRE

- Never allow flame to come close to the generator.

⚠ CAUTION : BURNS

- Do not touch the engine and muffler after stopping the engine as they are still extremely hot.

Inspect this generator when operation is poor to determine the fault/malfunction. Request the authorized distributor where the generator was purchased to perform maintenance if you cannot find any faults/malfunctions during inspection.

Problem		Suspected cause	Action
Engine does not start	Starter motor does not drive or speed is low.	1. Battery output is weak.	1. Check / battery liquid / or Charge.
		2. Battery is deteriorated.	2. Change battery
		3. Battery terminal is OFF or loose.	3. Fix / Tighten terminal
		4. Battery terminal is corroded.	4. Clean terminal
		5. Starter switch or relay is defective.	5. Ask our distributor to repair
		6. Starter motor is defective.	6. Ask our distributor to repair

Problem		Suspected cause	Action
Engine does not start.	Starter motor runs but engine does not start.	1. Fuel is insufficient 2. Fuel filter is clogged 3. Water is interfused in fuel line 4. Air is interfused in fuel line 5. Poor piping connection to external fuel tank 6. Fuel tank selector lever (3 way valve) position is wrong 7. Fuel cut solenoid (motor) does not work 8. Fuel pump defective	1. Add fuel 2. Clean/Change fuel filter 3. Drain water in water separator, fuel filter or fuel tank 4. Extract the air 5. Check piping connection 6. Check lever (3 way valve) 7-1. Check/Change fuse 7-2. Check/Change fuel cut Solenoid 8-1. Check/Change fuse 8-2. Check/Change fuel pump
	<Ambient temperature falls down below zero.>	1. Fuel is frozen 2. Water in fuel line is frozen 3. Pre-heater is defective	1. Use winterized fuel 2. Drain water in fuel line 3. Ask our distributor to repair
Engine starts but stalls immediately.		1. Fuel filter is clogged 2. Water is interfused in fuel line 3. Air is interfused in fuel line 4. Poor piping connection to external fuel tank 5. Air filter element is clogged 6. Lubricant oil is insufficient 7. Emergency operation/Fault detection	1. Clean/Change fuel filter 2. Drain water in water separator, fuel filter or fuel tank 3. Extract the air 4. Check piping connection 5. Check/Change air filter element 6. Supply lubricant oil 7. Ask our distributor to repair
Engine oil pressure is low.		1. Lubricant oil is insufficient 2. Oil filter is clogged 3. Oil Pressure switch is defective 4. Wrong oil is used	1. Supply lubricant oil 2. Change oil filter 3. Ask our distributor to repair 4. Change to proper kind and viscosity oil
Overheated		1. Engine thermostat is defective 2. Water temp sensor is defective 3. Water temp meter is defective 4. Fan belt tension is weak 5. Coolant is insufficient 6.Radiator core is clogged	1. Ask our distributor to repair 2. Ask our distributor to repair 3. Ask our distributor to repair 4. Check/Adjust fan belt 5. Check/Supply coolant 6. Clean radiator core
Black smoke comes out from muffler.		1. Air filter element is clogged 2. Fuel injection nozzle is defective 3. Improper fuel is used	1. Check/Change air filter element 2. Ask our distributor to repair 3.Change to clean fuel

Problem	Suspected cause	Action
White smoke comes out from muffler	1. Too much or too little oil to cylinder 2. Water is interfused in fuel line 3. Fuel injection nozzle is defective 4. Coolant temperature is too low 5. Engine thermostat is defective	1. Ask our distributor to repair. 2. Drain water in water separator, fuel filter or fuel tank 3. Ask our distributor to repair 4. Warm-up driving is needed 5. Ask our distributor to repair
Needle indication Does not move in Voltage meter	1. Voltage meter is defective 2. AVR is defective 3. Disconnected circuit, loose terminal or departed 4. Initial exciter is defective 5. Alternator is defective 6.AVR protective device operation	1. Ask our distributor to repair 2. Ask our distributor to repair 3. Ask our distributor to repair 4. Ask our distributor to repair 5. Ask our distributor to repair 6. Replace AVR fuse
Needle indication does not goes up to the rated voltage	1. Voltage meter is defective 2. AVR is defective 3. Voltage regulator dial is defective 4. Frequency is low	1. Ask our distributor to repair 2. Ask our distributor to repair 3. Ask our distributor to repair 4. Ask our distributor to repair
Needle indication exceeds the rated voltage	1. Voltage meter is defective 2. AVR is defective 3. Improper load cable connection	1. Ask our distributor to repair 2. Ask our distributor to repair 3. Correctly set the connection location to the output terminal
The voltage drops drastically when connecting to load	1. AVR is defective 2. Unbalanced loads sharing to each terminal 3. The current of the used equipment exceeds the rated current Loads total exceeds the rated current 4. Over load 5. AVR protective device operation 6. Frequency selector is wrong setting	1. Ask our distributor to repair 2. Balance the loads sharing to each terminal 3. Change to a device with an available capacity 4. Decrease the loads to meet the rated output 5. Replace AVR fuse 6. Set to properfrequency
Cannot turn the breaker to “ON” position	1. The breaker positions at between “ON” and “OFF” 2. Short circuit on the load 3. Earth Leakage Relay operates	1. Once turning the lever to “OFF”, turn it to “ON” 2. Check the load circuit 3. Repair the earth leakage location
The breaker trips to “OFF” position at light load	1. Current monitor setting is incorrect.	1. Ask our distributor to repair
The overload pre-caution lamp flashes at 80% or less of the rated output.	1. Current monitor setting is incorrect.	1. Ask our distributor to repair
The overload pre-caution lamp does not flashes at 80% or more of the rated output.	1. Current monitor setting is not correct.	1. Ask our distributor to repair

13. Generator Circuit Diagram

(1) 400/440V

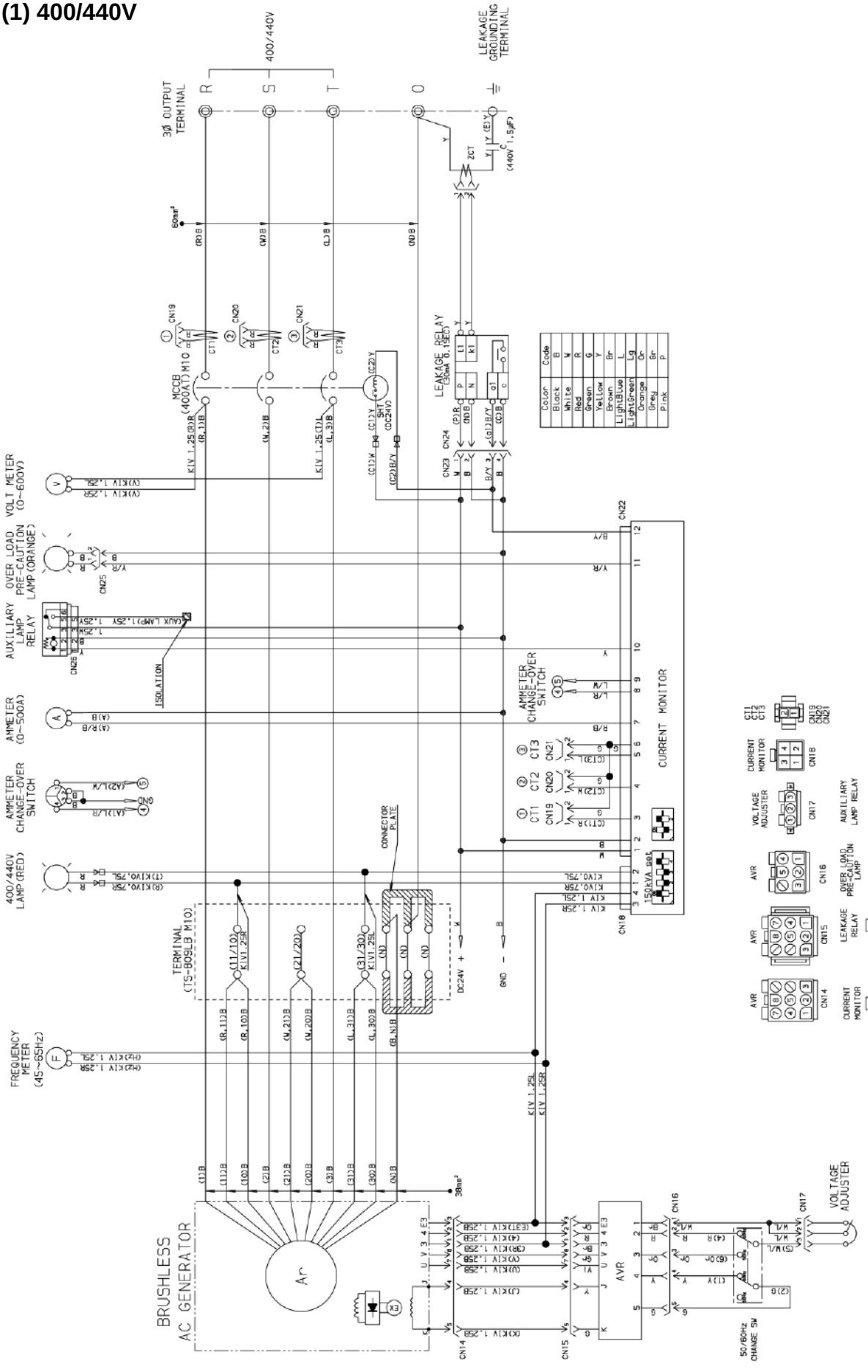

(2) 200/220V

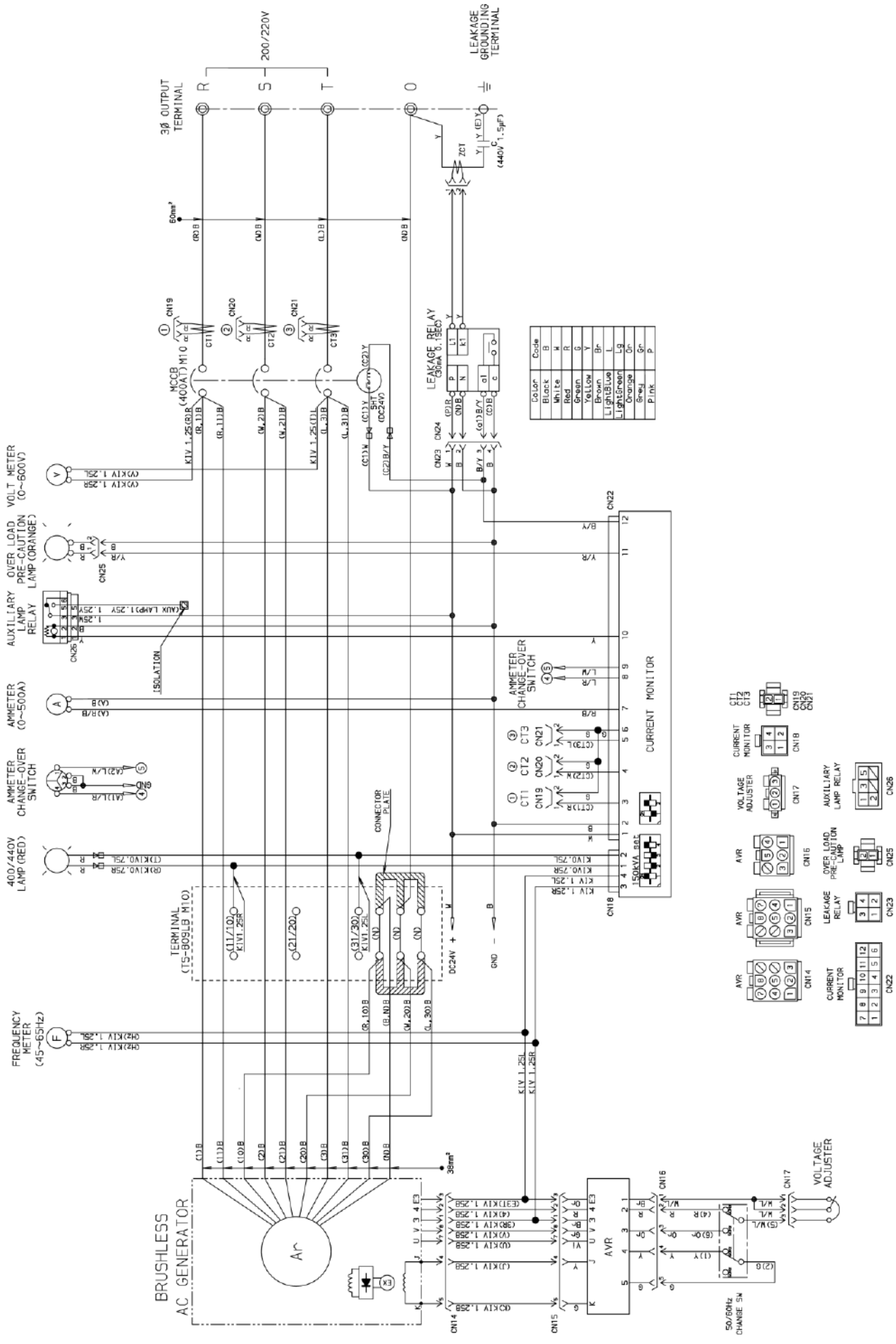

200/220V
3Ø OUTPUT TERMINAL
LEAKAGE GROUNDING TERMINAL
MCCB (400AT) M10
LEAKAGE RELAY
VOLT METER (0~600V)
OVER LOAD PRE-CAUTION LAMP (ORANGE)
AUXILIARY LAMP RELAY
AMMETER (0~500A)
AMMETER CHANGE-OVER SWITCH
400/440V LAMP (RED)
FREQUENCY METER (45~65Hz)
TERMINAL (TS-809LB M10)
CONNECTOR PLATE
CURRENT MONITOR
AMMETER CHANGE-OVER SWITCH
150kVA set
BRUSHLESS AC GENERATOR
AVR
VOLTAGE ADJUSTER
50/60Hz CHANGE SW

14. Engine Electrical Circuit Diagram

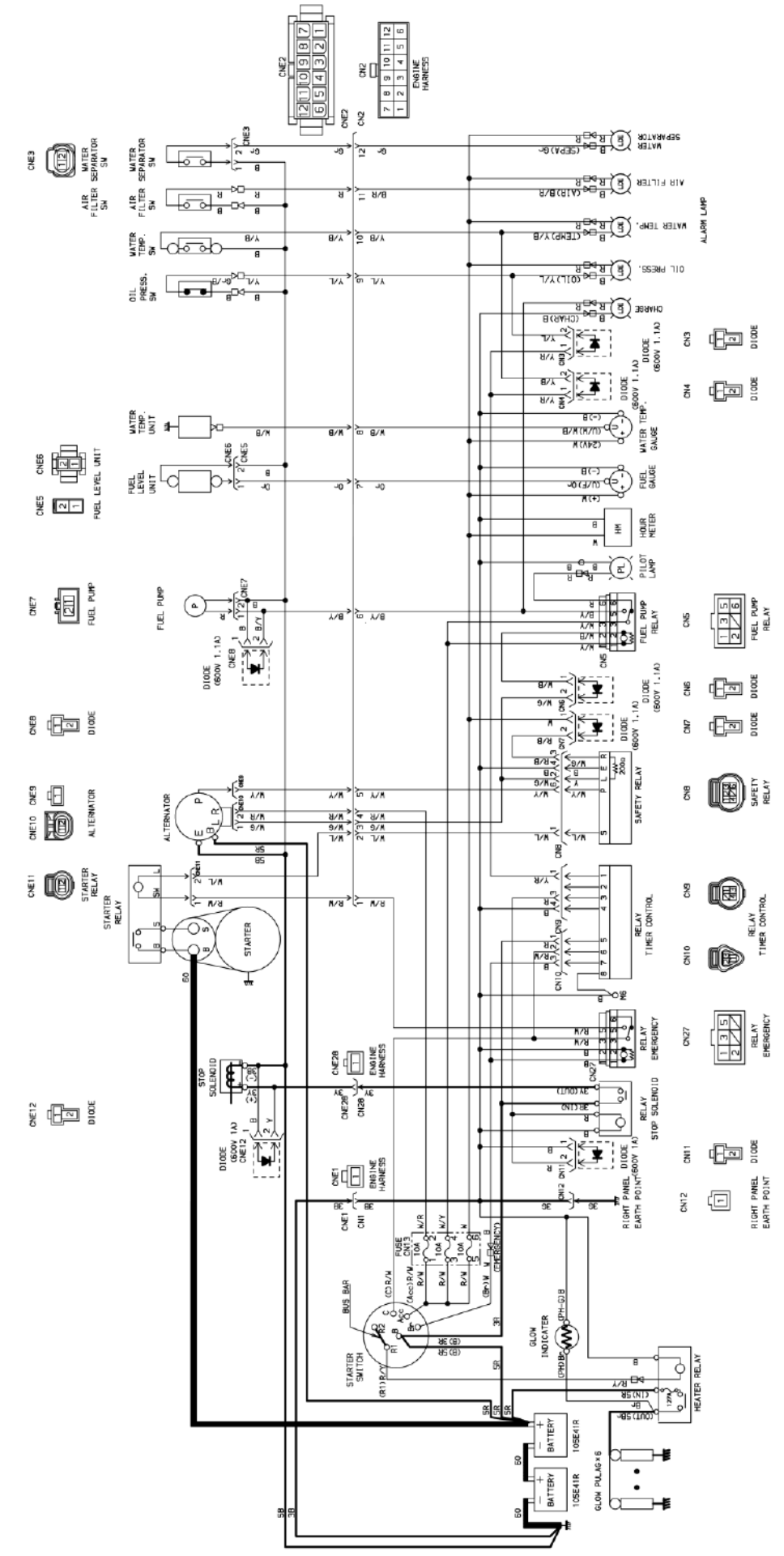

Color	Code
Black	B
White	W
Red	R
Green	G
Yellow	Y
Brown	Br
LightBlue	L
LightGreen	Lg
Orange	Or
Violet	V
Gray	Gr

STARTER SW CONNECTION

POSITION \ SYMBOL	B	R1 R2 50A	Ac 10A	Br 25A	C 10A
STOP	○				
PREHEAT	○	○		○	
RUN	○	○	○		
START	○	○		○	○

YAMABIKO CORPORATION
7-2 SUEHIROCHO 1-CHOME, OHME, TOKYO 198-8760, JAPAN
PHONE: 81-428-32-6118. FAX: 81-428-32-6145.

shindaiwa®

©2019 YAMABIKO CORPORATION

Printed in Japan